

EAST NORTH ELEVATION WEST

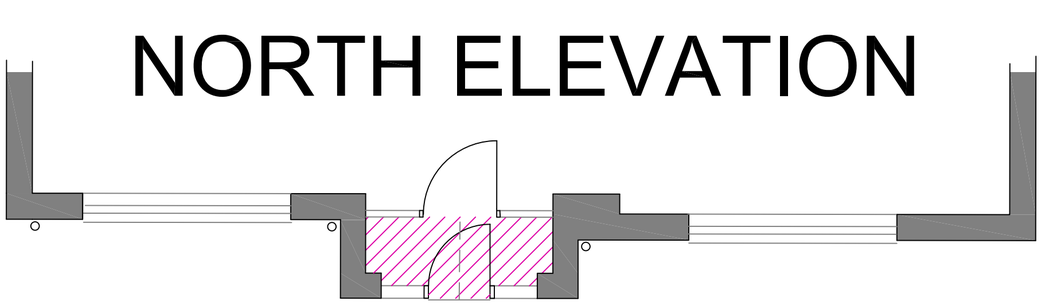

EXISTING PLAN OF PORCH



EAST NORTH ELEVATION WEST

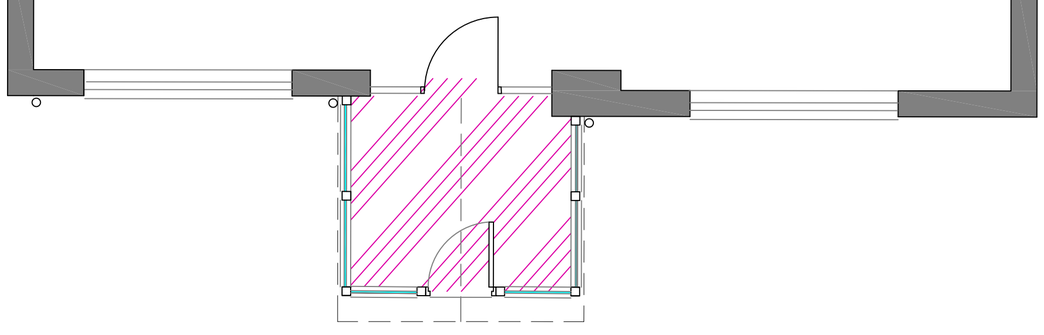

PROPOSED PLAN OF PORCH

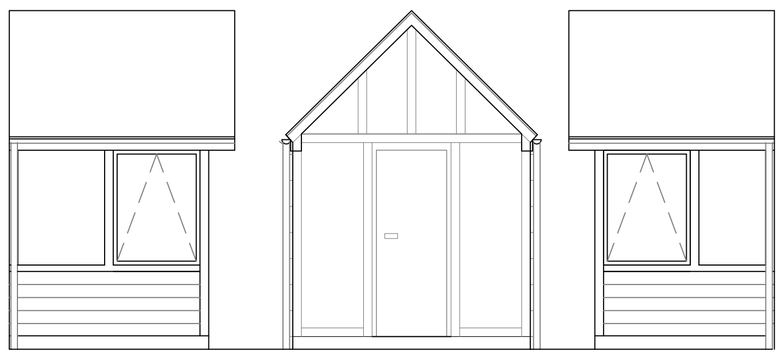

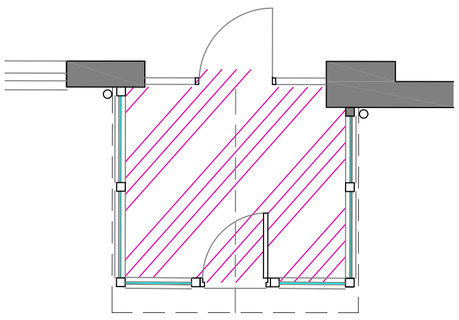

METRES

0 1 2 3 4 5 6 7

SCALE 1:50 AT A1

SPECIFICATION OF MATERIALS

MATCHING GREY TILED PITCHED ROOF
MATCHING RAINWATER GOODS
PAINTED HARDWOOD TIMBER FRAME
DOUBLE GLAZED WINDOW INSERTS
MATCHING STONE SPANDRELS TO SIDES
PAINTED HARDWOOD EXTERNAL DOOR
WATER BAR WEATHER STRIP + DPCs
PROJECTING ROOF

Project
New Replacement Porch
Goodison
5 Chadwick Nick Lane
Fritchley
Derbyshire

Details
Block Plan Proposed

Scale 1:50 @ A1
Date May 2023
Drwg 23-10 04

PLANNING ISSUE

Contact
mikewood@addc-architects.co.uk

addc architects

01332 842120
The View
Hazelwood Hill
BELPER
DE56 4AD
www.addc-architects.co.uk