JA SOLAR

JAM54S31 380-405/MR Series

MECHANICAL DIAGRAMS

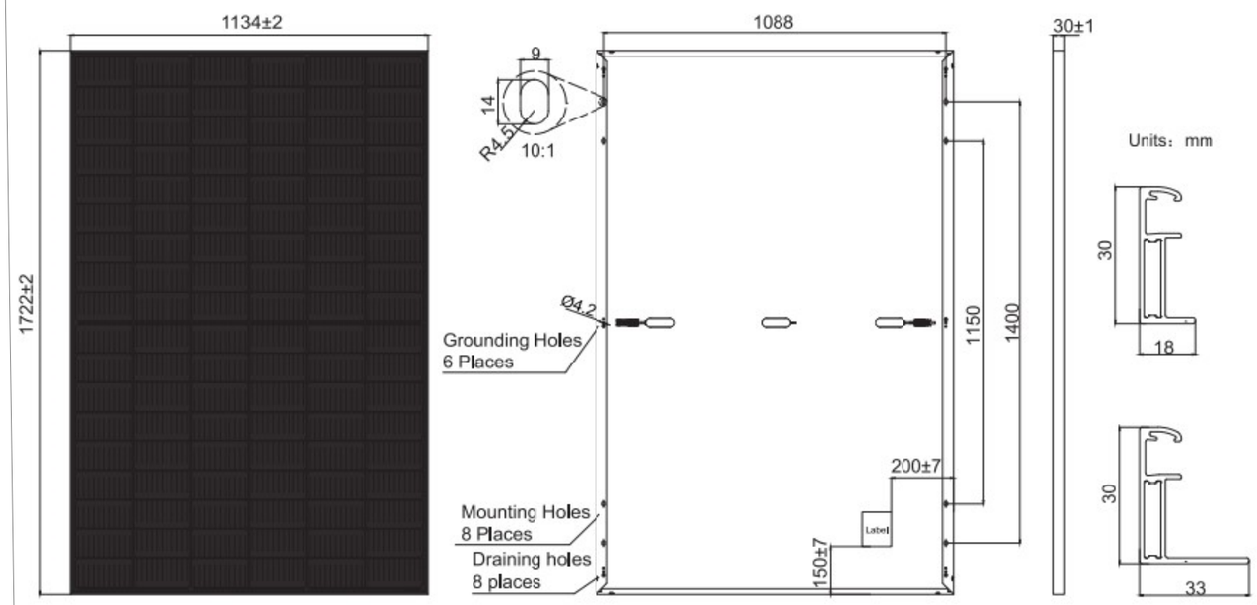

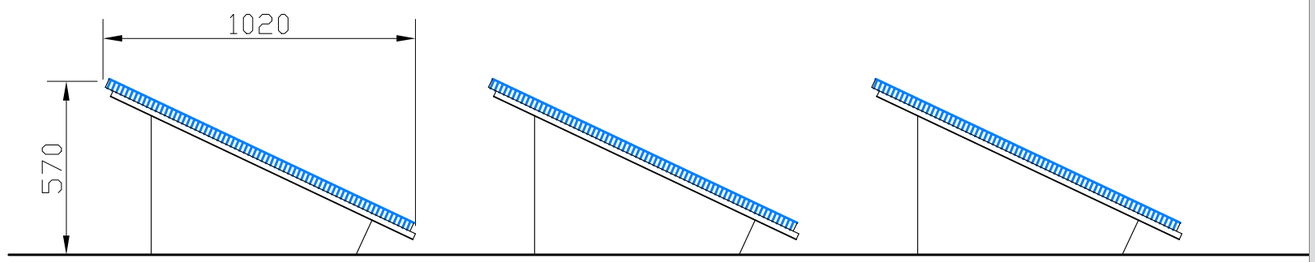

Side (same for both)

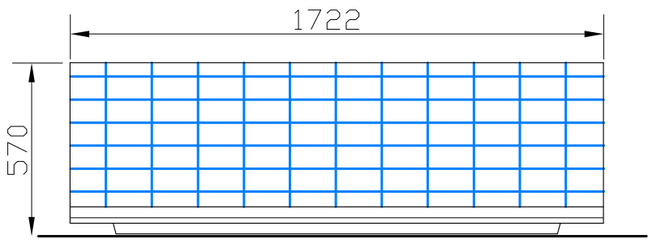

Front

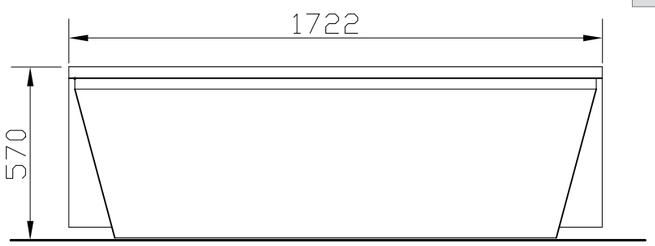

Rear

Support Trays
for each panel

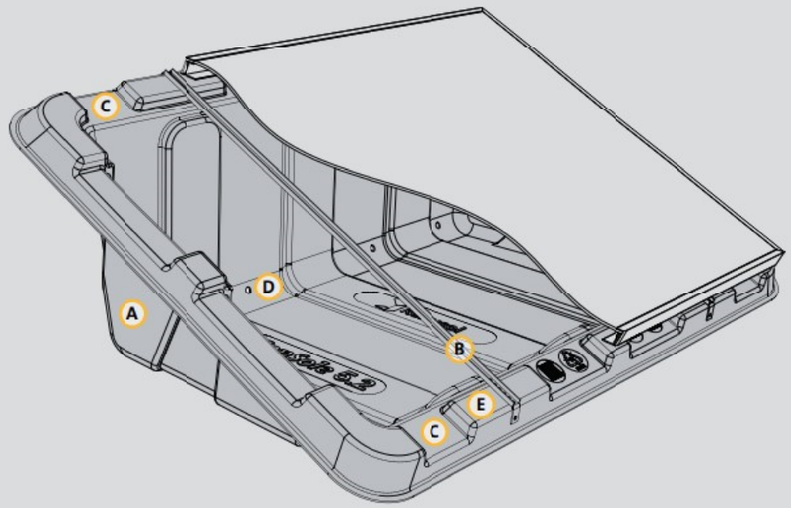

ConSole system overview:

A ConSole
B U-profile of aluminium
C Air slots, top and bottom
D Borehole for drainage
E All round mounting edge

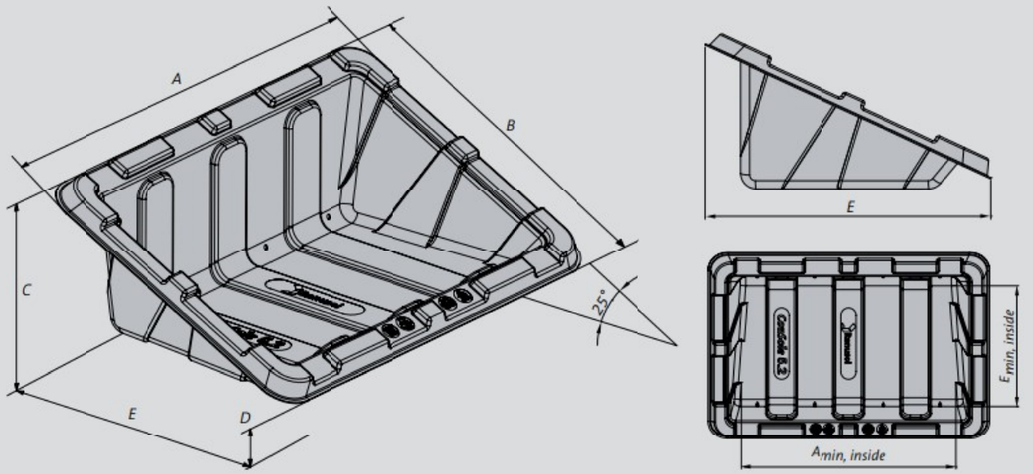

Recommended measurement of ConSole/PV-module

Measurement	A mm	B mm	C mm	D mm	E mm	$A_{min,\ inside} \times E_{min,\ inside}$ mm
ConSole 4.1	1,680	840	400	50	740	1,300 x 400
ConSole 4.2	1,240	1,090	530	50	960	890 x 490
ConSole 5.2	1,520	1,080	500	40	960	1,140 x 630
ConSole 6.2	1,740	1,070	500	50	970	1,380 x 630

Holt House, Holt Lane, Lea
Ground Mounted Solar PV Panels
Proposed Panel Details
2031-12
1:20@A3
25/04/2023