

Light Commercial & Residential

MULTI-SPLIT

M-002 Multi-split Overview
M-004 Multi-split Outdoor Units Lineup
M-006 2-unit to 5-unit Multi-split Connectable Indoor Units
M-007 6-unit Multi-split Connectable Indoor Units
M-008 Simultaneous Multi-split Connectable Indoor Units
M-040 Feature Summary

Refrigerant type R32 models

M-010 2-unit to 5-unit Multi-split
M-016 Simultaneous Multi-split Twin/Triple
M-020 2-unit to 5-unit Multi-split Indoor Units Specifications
M-024 2-unit to 5-unit Multi-split Combination Table

Refrigerant type R410A models

6-unit Multi-split

M-014 6-unit Multi-split

Simultaneous Multi-split Type

M-018 Simultaneous Multi-split Twin/Triple/Double Twin
M-022 6-unit Multi-split Indoor Units Specifications
M-034 6-unit Multi-split Combination Table

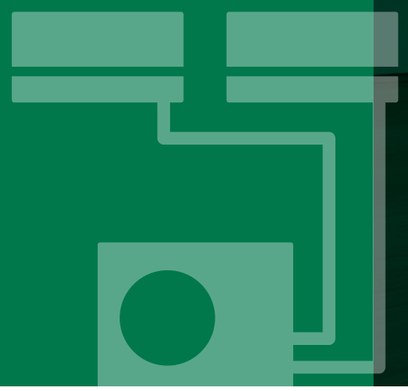

A single outdoor unit drives multiple indoor units, offering greater flexibility in system configuration.

If you wish to keep an entire floor or two or more rooms comfortable, we recommend you choose a multi-split air conditioning system with a single outdoor unit. Choose one that meets your air conditioning requirements from the variety of models we offer. You can mix and match indoor and outdoor units as you wish to build the system that best suits your needs.

Multi-split Overview

Multi-split's space-saving outdoor unit allows for connections of up to eight indoor units for multiple rooms. Added to the lineup are models compatible with the new R32 refrigerant, offering environmentally friendly comfort in homes, offices, stores, and various other settings.





3-unit, 4-unit, 5-unit Multi-split Types



3-unit 18/24 class



4-unit 30 class
5-unit 36 class

2-unit to 6-unit Multi-split

Recommended for residences, offices, and other situations where multiple rooms require air conditioning. Each of the 2 to 6 connected indoor units can also be operated individually. Operation control, time scheduling for each room, and energy-saving options can be set on both individual and central remote controllers. The outdoor unit is designed to save space and is flexible enough to be installed on a balcony or underneath a waist-high window.

Twin/Triple



Twin 36 class
(Single-phase/3-phase)



Twin/Triple 45/54 class
(Single-phase/3-phase)

Simultaneous Multi-split Type

Suitable for a small building, the entrance hall of a small office, meeting rooms, educational facilities, and other roomy areas where multiple indoor units need to be operated simultaneously. Up to 4 indoor units can be operated simultaneously, making the system perfect for air conditioning not only offices with large spaces, but also spaces with atypical layouts.



2-unit Multi-split



14 class



18 class

6-unit Multi-split



6-unit 45 class



Twin/Triple/ Double Twin



72/90 class
(3-phase)

Multi-split Outdoor Units Lineup

EUROVENT CERTIFIED PERFORMANCE www.eurovent-certification.com

FUJITSU GENERAL (Euro) GmbH participates in the ECP program for AC.
Check ongoing validity of certificate: www.eurovent-certification.com
*Models so marked are not ECC certified.

			Class	14	18	18	24	30	36	45		54	72	90
			Cooling rated capacity (kW)	4.0	5.0	5.4	6.8	8.0	10.0	12.5	14.0	14.0	19.0	22.0
2-unit, 3-unit, 4-unit, 5-unit Multi-split	2-unit Multi-split Up to 2 units	R32		AOYG14KBTA2	AOYG18KBTA2									
	3-unit Multi-split Up to 3 units	R32	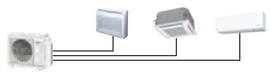			AOYG18KBTA3	AOYG24KBTA3							
	4-unit Multi-split Up to 4 units	R32						AOYG30KBTA4						
	5-unit Multi-split Up to 5 units	R32	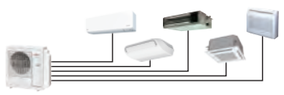						AOYG36KBTA5*[1]					
6-unit Multi-split	6-unit Multi-split Up to 6 units	R410A	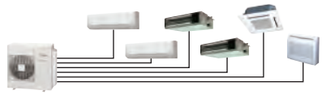							AOYG45LBLA6*				
Simultaneous Multi-split	**Twin** Single-phase	R32							AOYG36KBTB	AOYG45KBTB				
	Twin 3-phase	R32							AOYG36KRTA	AOYG45KRTA				
	Twin/Triple Single-phase	R32	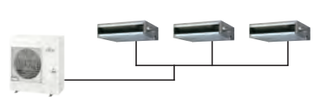									AOYG54KBTB		
	Twin/Triple 3-phase	R32	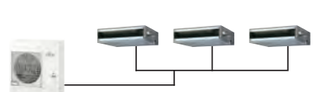									AOYG54KRTA		
	Twin/Triple/ Double Twin 3-phase	R410A	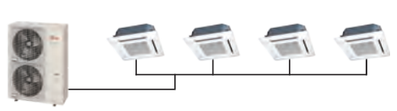										AOYG72LRLA	AOYG90LRLA

Notes: **1. 2-unit Multi-split:** Connectable indoor units are 2 units.
AOYG14KBTA2: Total capacity of indoor units connected must be between 4.0 kW and 6.0 kW.
AOYG18KBTA2: Total capacity of indoor units connected must be between 4.0 kW and 7.5 kW.
2. 3-unit Multi-split: Connectable indoor units are 2 to 3 units.
AOYG18KBTA3: Total capacity of indoor units connected must be between 4.0 kW and 8.5 kW.
AOYG24KBTA3: Total capacity of indoor units connected must be between 4.0 kW and 10.5 kW.
3. 4-unit Multi-split: Connectable indoor units are 2 to 4 units.
AOYG30KBTA4: Total capacity of indoor units connected must be between 7.5 kW and 14.0 kW.
4. 5-unit Multi-split: Connectable indoor units are 2 to 5 units
AOYG36KBTA5: Total capacity of indoor units connected must be between 7.5 kW and 15.5 kW.
5. 6-unit Multi-split: Connectable indoor units are 2 to 6 units
AOYG45LBLA6: Total capacity of indoor units connected must be between 9.5 kW and 18.0 kW.

Cooling rated capacity: *1: 9.5 kW

2-unit to 5-unit **Multi-split** Connectable Indoor Units

REFRIGERANT R32

Type		2-unit		3-unit		4-unit	5-unit
Model name		AOYG14KBTA2	AOYG18KBTA2	AOYG18KBTA3	AOYG24KBTA3	AOYG30KBTA4	AOYG36KBTA5
Multi-split Type Outdoor Unit							
Capacity (kW)	Cooling	4.0	5.0	5.4	6.8	8.0	9.5
	Heating	4.4	5.6	6.8	8.0	9.6	10.6

Indoor Unit	BTU	kW Class						
NEW ASYG07/09/12/14KGTF ASYG07/09/12/14KGTE	7,000	2.0	●	●	●	●	●	●
NEW  ASYG07/09/12/14KETF ASYG07/09/12/14KETE	9,000	2.5	●	●	●	●	●	●
NEW  ASYG07/09/12/14KMCF ASYG07/09/12/14KMCE	12,000	3.5	●	●	●	●	●	●
NEW  ASYG07/09/12/14KETF-B ASYG07/09/12/14KETE-B	14,000	4.0	–	●	●	●	●	●
 ASYG18/22/24KMTE	18,000	5.0	–	–	–	●	●	●
	22,000	6.0	–	–	–	–	●	●
	24,000	7.0	–	–	–	–	●	●
 AGYG09/12/14KVCA	9,000	2.5	●	●	●	●	●	●
	12,000	3.5	●	●	●	●	●	●
	14,000	4.0	–	●	●	●	●	●
 AUXG07/09/12/14/18/22KVLA	7,000	2.0	●	●	●	●	●	●
	9,000	2.5	●	●	●	●	●	●
	12,000	3.5	●	●	●	●	●	●
	14,000	4.0	–	●	●	●	●	●
	18,000	5.0	–	–	–	●	●	●
	22,000	6.0	–	–	–	–	●	●
 ARXG07/09/12/14/18KSLAP	7,000	2.0	●	●	●	●	●	●
	9,000	2.5	●	●	●	●	●	●
	12,000	3.5	●	●	●	●	●	●
	14,000	4.0	–	●	●	●	●	●
	18,000	5.0	–	–	–	●	●	●
 ARXG07/09/12/14/18KLLAP	7,000	2.0	●	●	●	●	●	●
	9,000	2.5	●	●	●	●	●	●
	12,000	3.5	●	●	●	●	●	●
	14,000	4.0	–	●	●	●	●	●
	18,000	5.0	–	–	–	●	●	●
 ARXG22KMLB	22,000	6.0	–	–	–	–	●	●
 ABYG18/22KRTA	18,000	5.0	–	–	–	●	●	●
	22,000	6.0	–	–	–	–	●	●

6-unit **Multi-split** Connectable Indoor Units

REFRIGERANT R410A

Type		6-unit
Model name		AOYG45LBLA6
Multi-split Type Outdoor Unit		
Capacity (kW)	Cooling	12.5
	Heating	13.5

Indoor Unit	BTU	kW Class	
 ASYG07/09/12/14LMCE	7,000	2.0	●
	9,000	2.5	●
 ASYG07/09/12/14LUCA	12,000	3.5	●
	14,000	4.0	●
 ASYG18/24LF	18,000	5.0	●
	24,000	7.0	●
 AGYG09/12/14LV	9,000	2.5	●
	12,000	3.5	●
	14,000	4.0	●
 AUYG07/09/12/14/18LV	7,000	2.0	●
	9,000	2.5	●
	12,000	3.5	●
	14,000	4.0	●
	18,000	5.0	●
 ABYG14LVTA ABYG18LVTB	14,000	4.0	●
	18,000	5.0	●
 ARYG07/09/12/14/18LSLAP	7,000	2.0	●
	9,000	2.5	●
	12,000	3.5	●
	14,000	4.0	●
	18,000	5.0	●
 ARYG07/09/12/14/18LL	7,000	2.0	●
	9,000	2.5	●
	12,000	3.5	●
	14,000	4.0	●
	18,000	5.0	●

Simultaneous Multi-split Connectable Indoor Units

REFRIGERANT R32

Type		4HP		5HP		6HP	
Model name		AOYG36KBTB	AOYG36KRTA	AOYG45KBTB	AOYG45KRTA	AOYG54KBTB	AOYG54KRTA
Simultaneous Multi-split Type Outdoor Unit							
Capacity (kW)	Cooling	9.5		12.1		13.4	13.4
	Heating	10.8		13.5		15.5	15.5

Indoor Unit	BTU	kW Class	Twin			Triple
 AUXG18/22/24KVLA	18,000	5.0	● × 2	–	–	● × 3
	22,000	6.5	–	● × 2	–	–
	24,000	7.0	–	–	● × 2	–
 ARXG18KLLAP	18,000	5.0	● × 2	–	–	● × 3
 ARXG22KMLB ARXG24KMLA	22,000	6.5	–	● × 2	–	–
	24,000	7.0	–	–	● × 2	–
Separation tube			UTP-SX236A (18/22/24)			UTP-SX354A (18)

Note : Please be aware that 2-wired group control is not possible with Simultaneous Multi-split.

REFRIGERANT R410A

Type		8HP	10HP
Model name		AOYG72LRLA	AOYG90LRLA
Simultaneous Multi-split Outdoor Unit			
Capacity (kW)	Cooling	19.0	22.0
	Heating	22.4	27.0

Indoor Unit	BTU	kW Class	Twin	Triple	Double Twin	Twin	Triple	Double Twin
 AUYG18/22/24LV	18,000	5.0	–	–	● × 4	–	–	–
	22,000	6.5	–	–	–	–	–	● × 4
	24,000	7.0	–	● × 3	–	–	–	–
 AUYG30/36/45LR	30,000	8.8	–	–	–	–	● × 3	–
	36,000	10.6	● × 2	–	–	–	–	–
	45,000	12.5	–	–	–	● × 2	–	–
 ARYG18LLTB	18,000	5.0	–	–	● × 4	–	–	–
 ARYG24/30/36/45LM	24,000	7.0	–	● × 3	–	–	–	–
	30,000	8.8	–	–	–	–	● × 3	–
	36,000	10.6	● × 2	–	–	–	–	–
	45,000	12.5	–	–	–	● × 2	–	–
 ABYG/18/22/24LV	18,000	5.0	–	–	● × 4	–	–	–
	22,000	6.5	–	–	–	–	–	● × 4
	24,000	7.0	–	● × 3	–	–	–	–
 ABYG30/36/45LR	30,000	8.8	–	–	–	–	● × 3	–
	36,000	10.6	● × 2	–	–	–	–	–
	45,000	12.5	–	–	–	● × 2	–	–
Separation tube			UTP-SX272A × 1	UTP-SX372A × 1	UTP-SX272A x 1, UTP-SX236A x 2	UTP-SX272A × 1	UTP-SX372A × 1	UTP-SX272A × 1, UTP-SX254A × 2

2-unit, 3-unit, 4-unit, 5-unit, Multi-split



ALL DC

High energy saving

With the adoption of a high-efficiency DC twin-rotary compressor, all models achieved an energy efficiency scale of A+++ for cooling and A++ for heating.

Rank
Cooling A+++
Heating A++

SEER 8.7* SCOP 4.7

*: 2-unit 14 class

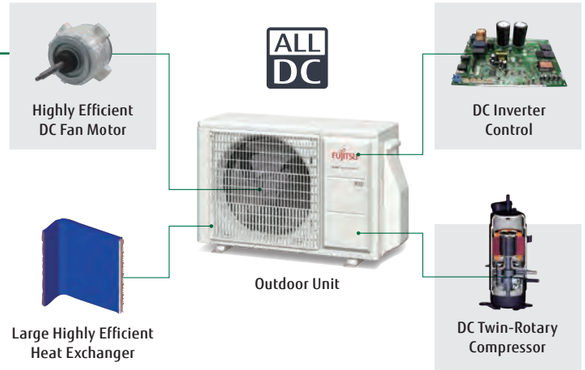

R32 refrigerant model

In addition to its high energy efficiency, the R32 refrigerant has a larger volumetric capacity than the R410A refrigerant, which means the R32 refrigerant models require less refrigerant charge than the R410A models.

Pre-charge refrigerant amount (kg)	R32	R410A
2-unit 14 class	0.9	1.25
2-unit 18 class	1.02	1.30
3-unit 18 class	1.8	2.2
3-unit 24 class	1.8	2.2
4-unit 30 class	2.2	3.3
5-unit 36 class	2.5	4.0

Quiet operation

The sound power level is reduced by up to 7 dB compared to the current R410 models.

Sound Power Level

*3-unit 24 class (cooling)



Space-saving installation

Multiple indoor units can be connected to 1 outdoor unit by long piping as well. Unlike a single type, the outdoor unit can be installed in the most space-saving location.



Compact design

Unlike a single type, the outdoor unit can be installed in the most space-saving location.



Depth difference	Space requirement
-15.5 % !*	-36.2 % !*

*: Compared with current 5-unit multi models

Easy evacuation

All connected pipes and indoor units can be evacuated quickly via our centralized valve method.
Requires evacuation only once.

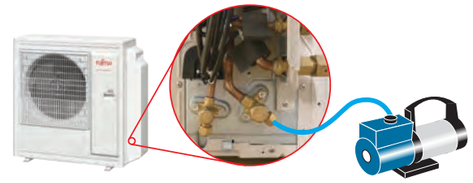

Wide range of indoor units with various models

We offer 41 models in 5 types in a capacity range from 2.0 kW to 6.0 kW. Wide range of requirements can be realized from private homes through to large shops and hotels



Models equipped with the New R32 Refrigerant

Wall-mounted type with sophisticated design

Designer Series



Cool Beauty Design
07/09/12/14 kBTU



High Spec & Design
07/09/12/14 kBTU

Standard Series



High Efficiency & Comfort
07/09/12/14 kBTU



High Efficiency & Large Rooms
18/22/24 kBTU

Middle and small capacity models are available. This makes installation easier in small spaces.

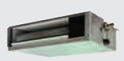

Mini Duct
07/09/12/14/18 kBTU



Slim Duct
07/09/12/14/18 kBTU



Medium static pressure duct
22 kBTU



Compact Cassette
07/09/12/14/18/22 kBTU



Floor
09/12/14/ kBTU



Ceiling
18/22 kBTU

2-unit: AOYG14KBTA2 / AOYG18KBTA2
3-unit: AOYG18KBTA3 / AOYG24KBTA3
4-unit: AOYG30KBTA4
5-unit: AOYG36KBTA5



2-unit　3-unit　4-unit, 5-unit

Specifications (2-unit)

Model name			AOYG14KBTA2	AOYG18KBTA2
Power Source			Single phase, ~230 V, 50 Hz	
Rated Capacity (Min. - Max.)	Cooling	kW	4.0 (1.4-4.6)	5.0 (1.7-5.8)
	Heating		4.4 (1.1-5.5)	5.6 (1.8-6.6)
EER	Cooling	W/W	4.12	4.03
COP	Heating		4.63	4.59
Sound Pressure Level (High)	Cooling	dB(A)	47	47
	Heating		49	50
Sound Power Level (High)	Cooling		60	60
	Heating		62	62
Airflow Rate	Cooling/Heating	m^3/h	1,670/1,670	1,960/2,020
Net Dimensions H × W × D		mm	542 × 799 × 290	632 × 799 × 290
Weight		kg (lbs)	33 (73)	37 (82)
Connection Pipe Diameter	Liquid	mm	6.35 × 2	6.35 × 2
	Gas		9.52 × 2	9.52 × 2
Max. Pipe Length	Total/Each	m	30/20	30/20
Max. Height Difference	Between Outdoor Unit and Each Indoor Unit		15	15
	Between Indoor Units		10	10
Operating Range	Cooling	°CDB	-10 to 46	-10 to 46
	Heating		-15 to 24	-15 to 24
Refrigerant	Type (Global Warming Potential)		R32 (675)	R32 (675)
	Charge	kg (CO2eq-T)	0.9 (0.608)	1.02 (0.689)

Specifications (3-unit)

Model name			AOYG18KBTA3	AOYG24KBTA3
Power Source			Single phase, ~230 V, 50 Hz	
Rated Capacity (Min. - Max.)	Cooling	kW	5.4 (1.8-7.0)	6.8 (1.8-8.5)
	Heating		6.8 (2.0-8.0)	8.0 (2.0-9.2)
EER	Cooling	W/W	4.78	3.90
COP	Heating		4.89	4.40
Sound Pressure Level (High)	Cooling	dB(A)	46	48
	Heating		49	53
Sound Power Level (High)	Cooling		59	61
	Heating		61	67
Airflow Rate	Cooling/Heating	m^3/h	2,220/2,160	2,270/2,730
Net Dimensions H × W × D		mm	716 × 820 × 315	716 × 820 × 315
Weight		kg (lbs)	46 (102)	46 (102)
Connection Pipe Diameter	Liquid	mm	6.35 × 3	6.35 × 3
	Gas		9.52 × 3	9.52 × 2, 12.70 × 1 adapter [12.70 → 9.52] × 1
Max. Pipe Length	Total/Each	m	50/25	50/25
Max. Height Difference	Between Outdoor Unit and Each Indoor Unit		15	15
	Between Indoor Units		10	10
Operating Range	Cooling	°CDB	-10 to 46	-10 to 46
	Heating		-15 to 24	-15 to 24
Refrigerant	Type (Global Warming Potential)		R32 (675)	R32 (675)
	Charge	kg (CO2eq-T)	1.8 (1.215)	1.8 (1.215)

Specifications (4-unit, 5-unit)

Model name			AOYG30KBTA4	AOYG36KBTA5
Power Source			Single phase, ~230 V, 50 Hz	
Rated Capacity (Min. - Max.)	Cooling	kW	8.0 (2.4-10.1)	9.5 (3.0-11.0)
	Heating		9.6 (3.0-11.2)	10.6 (3.5-12.0)
EER	Cooling	W/W	3.90	3.80
COP	Heating		4.55	4.50
Sound Pressure Level (High)	Cooling	dB(A)	50	52
	Heating		54	55
Sound Power Level (High)	Cooling		63	65
	Heating		66	68
Airflow Rate	Cooling/Heating	m^3/h	2,400/2,950	2,450/2,900
Net Dimensions H × W × D		mm	884 × 820 × 315	884 × 820 × 315
Weight		kg (lbs)	55 (121)	59 (130)
Connection Pipe Diameter	Liquid	mm	6.35 × 4	6.35 × 5
	Gas		9.52 × 2, 12.70 × 2 adapter [12.70 → 9.52] × 2	9.52 × 3, 12.70 × 2 adapter [12.70 → 9.52] × 2 adapter [9.52 → 12.70] × 1
Max. Pipe Length*	Total/Each	m	70/25	75/25
Max. Height Difference	Between Outdoor Unit and Each Indoor Unit		15	15
	Between Indoor Units		10	10
Operating Range	Cooling	°CDB	-10 to 46	-10 to 46
	Heating		-15 to 24	-15 to 24
Refrigerant	Type (Global Warming Potential)		R32 (675)	R32 (675)
	Charge	kg (CO2eq-T)	2.2 (1.485)	2.5 (1.688)

*Length not applicable when floor units are connected. For details, refer to the installation manual.

Dimensions

(Unit: mm)

2-unit: AOYG14KBTA2

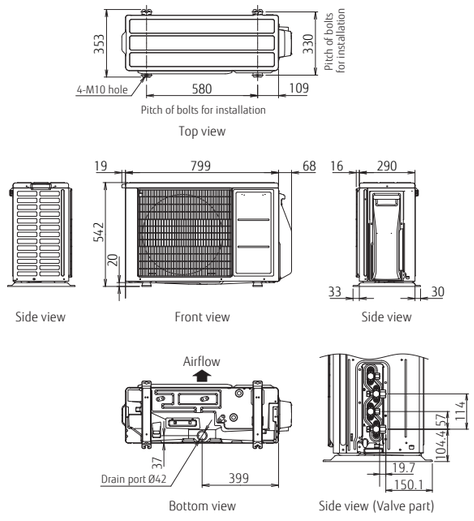

2-unit: AOYG18KBTA2

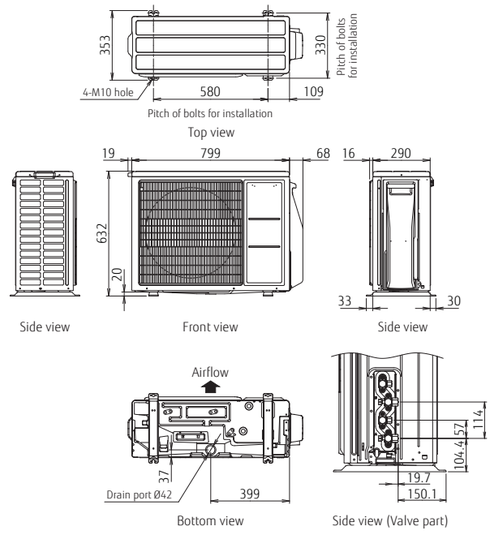

3-unit: AOYG18KBTA3 / AOYG24KBTA3

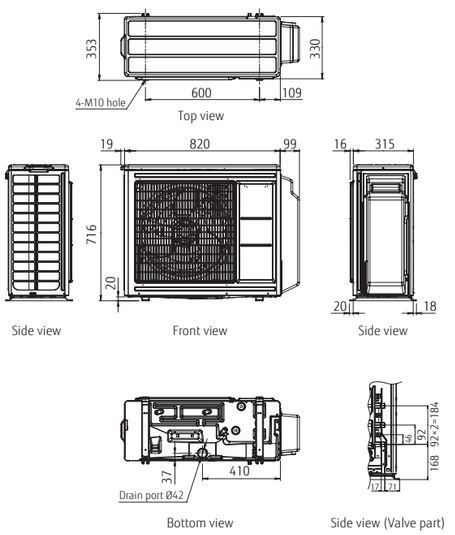

4-unit: AOYG30KBTA4
5-unit: AOYG36KBTA5

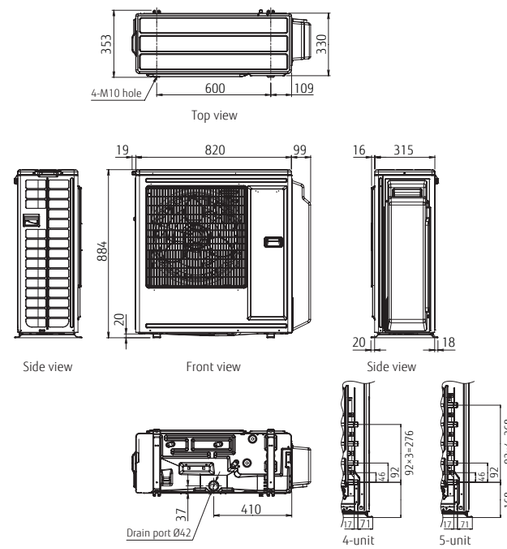

6-unit Multi-split



ALL DC

A wide variety of models to choose from

We offer 16 models in 4 types in a capacity range from 2.0 kW to 4.0 kW Wide range of requirements can be realized from private homes through to large shops and hotels















Compact design

Multiple indoor units can be connected to 1 outdoor unit by long piping as well.
Unlike a single type, the outdoor unit can be installed in the most space-saving location.



Easy installation

All connected pipes and indoor units can be evacuated quickly via our centralized valve method.
Requires evacuation only once.

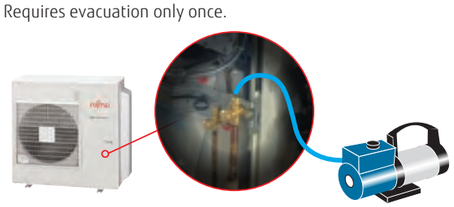

Central & Individual control

- Batched control of up to 8 indoor units. Unified setting of room temperature, airflow volume, and local control restrictions across units.
- Language can be selected from English, French, German, Greek, Italian, Portuguese, Russian, Spanish, or Turkish.
- Large backlit LED screen
- Large easy-to-see operation panel

Max. Controllable
1 multi-system

Max. Controllable
8 indoor units



REFRIGERANT R410A

6-unit: AOYG45LBLA6



Specifications (5-unit, 6-unit)

Model name			AOYG45LBLA6
Power Source			Single phase, ~230 V, 50 Hz
Rated Capacity (Min. - Max.)	Cooling	kW	12.5 (3.5-14.0)
	Heating		13.5 (3.5-16.0)
EER	Cooling	W/W	3.50
COP	Heating		4.00
Sound Pressure Level (High)	Cooling	dB(A)	53
	Heating		55
Sound Power Level (High)	Cooling		-
	Heating		-
Airflow Rate	Cooling/Heating	m^3/h	4,200/4,200
Net Dimensions H × W × D		mm	998 × 970 × 370
Weight		kg (lbs)	94 (207)
Connection Pipe Diameter	Liquid	mm	6.35 × 6
	Gas		9.52 × 4, 12.70 × 2
Max. Pipe Length	Total/Each	m	80/25
Max. Height Difference	Between Outdoor Unit and Each Indoor Unit.		15
	Between Indoor Units.		10
Operating Range	Cooling	°CDB	-10 to 46
	Heating		-15 to 24
Refrigerant	Type (Global Warming Potential)		R410A (2,088)
	Charge	kg (CO2eq-T)	4.00 (8.352)

Dimensions

(Unit: mm)

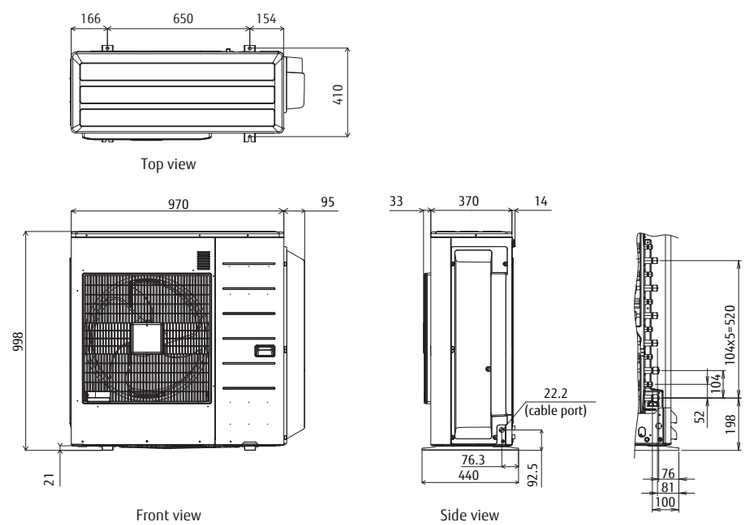

Simultaneous Multi-split Type

Twin/Triple



ALL DC

Meets a variety of installation needs from offices to commercial spaces, with up to 3 indoor units in the same room connected to an outdoor unit.

Select indoor units according to floor layout and heat load estimated by the number of people working in the room and the direction and intensity of sunlight entering the room.
Perfect airflow distribution can be achieved for optimum comfort.

Installation according to floor layout

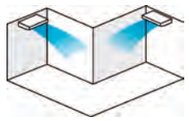

Installation according to lighting conditions

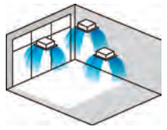

Design flexibility

Slim & Compact Design

The outdoor unit in this series is 22.7% shorter* than a twin-fan outdoor unit. The reduced height makes it easy to install in tight spaces.

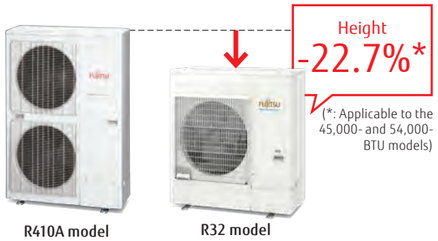

R410A model　　R32 model

Flexible installation

Pipe length of up to 50 m and a height difference of up to 30 m can be accommodated. Multi-split systems can be installed in large residences and multi-story buildings.

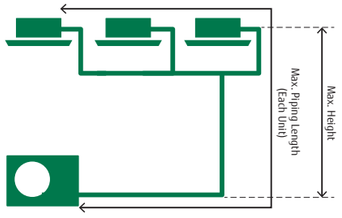

Max. Pipe Length (Each Unit): 50 m

Max. Height: 30 m

New lineup of indoor units

The indoor units, available in 6 models of 3 types, can be selected according to room size and conditions.



Compact Cassette



Slim Duct



Duct

Note : Please be aware that 2-wired group control is not possible with Simultaneous Multi-split.

Model: AOYG36KBTB / AOYG45KBTB / AOYG54KBTB
AOYG36KRTA [3-phase] / AOYG45KRTA [3-phase] / AOYG54KRTA [3-phase]



36



45/54

Specifications (Indoor units/Outdoor units)

Indoor Units Model name				Compact Cassette		
				AUXG18KVLA	AUXG22KVLA	AUXG24KVLA
Power Source				Single phase, ~230 V, 50 Hz		
Airflow Rate	Cooling	H/M/L/Q	m^3/h	680/580/490/410	830/740/600/450	930/830/600/450
	Heating	H/M/L/Q		800/680/580/450	860/760/700/530	930/850/700/530
Net Dimensions H × W × D			mm	245 × 570 × 570	245 × 570 × 570	245 × 570 × 570
Weight			kg (lbs)	15 (33)	16 (35)	16 (35)
Cassette Grille				UTG-UFYF-W	UTG-UFYF-W	UTG-UFYF-W

Indoor Units Model name				Duct		
				ARXG18KLLAP	ARXG22KMLB	ARXG24KMLA
Power Source				Single phase, ~230 V, 50 Hz		
Airflow Rate	Cooling	H/M/L/Q	m^3/h	940/880/820/750	1,100/910/750/580	1,100/910/750/580
	Heating	H/M/L/Q		940/880/820/750	1,100/910/750/580	1,100/910/750/580
Net Dimensions H × W × D			mm	198 × 900 × 620	270 × 1,135 × 700	270 × 1,135 × 700
Weight			kg (lbs)	20 (44)	35 (77)	35 (77)

Outdoor Units Model name				AOYG36KBTB	AOYG45KBTB	AOYG54KBTB	AOYG36KRTA	AOYG45KRTA	AOYG54KRTA
Capacity	Cooling		kW	9.5	12.1	13.4	9.5	12.1	13.4
	Heating			10.8	13.5	15.5	10.8	13.5	15.5
Power Source				Single phase, ~230 V, 50 Hz			3-phase, ~400 V, 50 Hz		
Pdesign	Cooling		kW	9.5	–	–	9.5	-	-
	Heating (-10°C)			8.7	–	–	8.7	-	-
SEER	Cooling		W/W	6.10	–	–	6.10	-	-
SCOP	Heating			4.00	–	–	4.00	-	-
Annual Energy Consumption	Cooling		kWh/a	545	–	–	545	-	-
	Heating			3,044	–	–	3,044	-	-
Energy Efficiency Class	Cooling			A++	–	–	A++	-	-
	Heating			A+	–	–	A+	-	-
Sound Pressure Level (High)	Cooling		dB(A)	55	57	57	55	57	57
	Heating			55	57	59	55	57	59
Sound Power Level (High)	Cooling			70	71	73	70	71	73
	Heating			70	71	73	70	71	73
Airflow Rate	Cooling/Heating		m^3/h	3,750/3,750	4,450/4,450	4,450/4,450	3,750/3,750	4,450/4,450	4,450/4,450
Net Dimensions H × W × D			mm	788 × 940 × 320	998 × 940 × 320	998 × 940 × 320	788 × 940 × 320	998 × 940 × 320	998 × 940 × 320
Weight			kg (lbs)	52 (115)	67 (148)	67 (148)	53 (117)	67 (148)	67 (148)
Connection Pipe Diameter (Liquid/Gas)			mm	9.52/15.88	9.52/15.88	9.52/15.88	9.52/15.88	9.52/15.88	9.52/15.88
Max. Pipe Length (Pre-Charge)			m	50 (30)	50 (30)	50 (30)	50 (30)	50 (30)	50 (30)
Max. Height Difference				30	30	30	30	30	30
Operating Range	Cooling		°CDB	-15 to 46	-15 to 46	-15 to 46	-15 to 46	-15 to 46	-15 to 46
	Heating			-15 to 24	-15 to 24	-15 to 24	-15 to 24	-15 to 24	-15 to 24
Refrigerant	Type (Global Warming Potential)			R32 (675)	R32 (675)	R32 (675)	R32 (675)	R32 (675)	R32 (675)
	Charge		kg (CO2eq-T)	1.90 (1.283)	2.70 (1.823)	2.70 (1.823)	1.90 (1.283)	2.70 (1.823)	2.70 (1.823)
Separation tube				UTP-SX236A (Twin)	UTP-SX236A (Twin)	UTP-SX236A (Twin) UTP-SX354A (Triple)	UTP-SX236A (Twin)	UTP-SX236A (Twin)	UTP-SX236A (Twin) UTP-SX354A (Triple)

• Indoor units of different types and capacity cannot be connected.
• The above specifications apply when used with a cassette type indoor unit.

Dimensions

(Unit: mm)

AOYG36KBTB / AOYG36KRTA

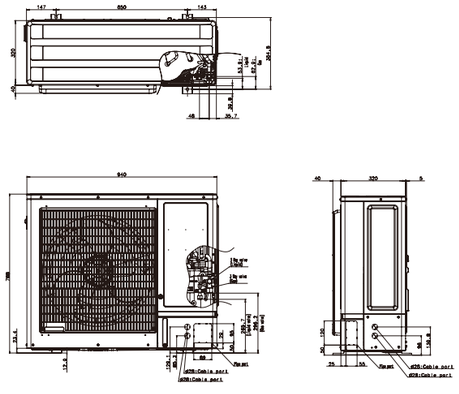

AOYG45KBTB / AOYG54KBTB
AOYG45KRTA / AOYG54KRTA

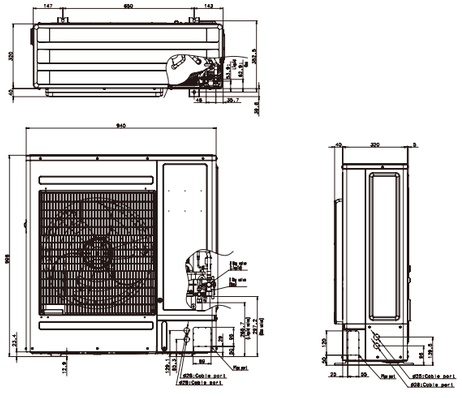

Simultaneous Multi-split Type

Twin/Triple/Double Twin

REFRIGERANT R410A



ALL DC

Meets a variety of installation needs from an open-plan office to a retail store, with up to 4 indoor units connected to an outdoor unit.

Select indoor units according to floor layout and heat load estimated by the number of people working in the room and the direction and intensity of sunlight entering the room. Perfect airflow distribution can be achieved for optimum comfort.

Installation according to floor layout

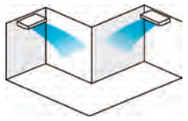

Installation according to lighting conditions

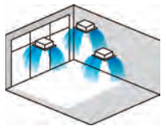

Installation according to layout and lighting conditions

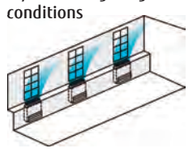

Installation according to large space

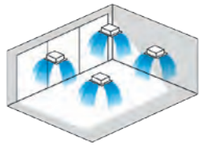

Simultaneous control

Up to 16 indoor units can be controlled simultaneously with a wired remote controller.

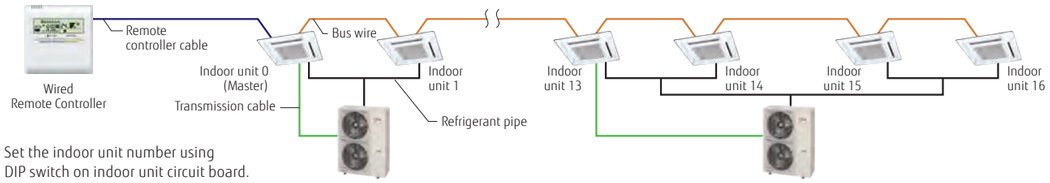

Set the indoor unit number using DIP switch on indoor unit circuit board.

*The following functions are not provided by a wireless remote controller: Timer operation, Sleep Timer operation, 10℃ Heat operation

Indoor unit lineup

The indoor units, available in 18 models of 6 types, can be selected according to room size and conditions.



Compact Cassette | Cassette | Slim Duct | Duct | Floor/Ceiling Universal | Ceiling

Model: AOYG72LRLA [3-phase] / AOYG90LRLA [3-phase]



Specifications (Indoor units/Outdoor units)

Indoor Units Model name				Compact Cassette, Cassette					
				AUYG18LVLB	AUYG22LVLA	AUYG24LVLA	AUYG30LRLE	AUYG36LRLE	AUYG45LRLA
Power Source				Single phase, ~230 V, 50 Hz					
Airflow Rate	Cooling	H/M/L/Q	m^3/h	750/610/520/410	930/830/600/450	930/830/600/450	1,600/1,400/1,270/1,150	1,800/1,400/1,270/1,150	1,900/1,640/1,460/1,250
	Heating	H/M/L/Q		800/710/600/450	930/860/700/530	930/830/600/450	1,800/1,400/1,270/1,150	1,800/1,400/1,270/1,150	1,900/1,640/1,460/1,250
Net Dimensions H × W × D			mm	245 × 570 × 570	245 × 570 × 570	245 × 570 × 570	288 × 840 × 840	288 × 840 × 840	288 × 840 × 840
Weight			kg (lbs)	15 (33)	16 (35)	16 (35)	26 (57)	26 (57)	26 (57)
Cassette Grille				UTG-UFYD-W			UTG-UGYA-W		

Indoor Units Model name				Duct				
				ARYG18LLTB	ARYG24LMLA	ARYG30LMLE	ARYG36LMLE	ARYG45LMLA
Power Source				Single phase, ~230 V, 50 Hz				
Airflow Rate	Cooling	H/M/L/Q	m^3/h	940/880/820/750	1,100/910/750/580	1,900/1,620/1,270/980	1,900/1,620/1,270/980	2,100/1,750/1,350/1,070
	Heating	H/M/L/Q		940/880/820/750	1,100/910/750/580	2,100/1,620/1,270/980	2,100/1,620/1,270/980	2,100/1,750/1,350/1,070
Net Dimensions H × W × D			mm	198 × 900 × 620	270 × 1135 × 700	270 × 1135 × 700	270 × 1135 × 700	270 × 1135 × 700
Weight			kg (lbs)	23 (51)	38 (84)	40 (88)	40 (88)	40 (88)

Indoor Units Model name				Floor/Ceiling, Ceiling					
				ABYG18LVTB	ABYG22LVTA	ABYG24LVTA	ABYG30LRTE	ABYG36LRTE	ABYG45LRTA
Power Source				Single phase, ~230 V, 50 Hz					
Airflow Rate	Cooling	H/M/L/Q	m^3/h	780/700/560/500	980/820/680/540	980/820/680/540	1,660/1,500/1,200/1,000	1,900/1,500/1,200/1,000	2,100/1,700/1,400/1,100
	Heating	H/M/L/Q		780/700/560/500	980/820/680/540	980/820/680/540	1,660/1,500/1,200/1,000	1,900/1,500/1,200/1,000	2,100/1,700/1,400/1,100
Net Dimensions H × W × D			mm	199 × 990 × 655	199 × 990 × 655	199 × 990 × 655	240 × 1660 × 700	240 × 1660 × 700	240 × 1660 × 700
Weight			kg (lbs)	27 (60)	27 (60)	27 (60)	46 (101)	46 (101)	46 (101)

Outdoor Units Model name			AOYG72LRLA			AOYG90LRLA		
Capacity	Cooling	kW	19.0			22.0		
	Heating		22.4			27.0		
Power Source			3-phase, ~400 V, 50 Hz					
Sound Pressure Level (High)	Cooling/Heating	dB(A)	55/55			55/57		
Airflow Rate	Cooling/Heating	m^3/h	8,400/8,400			8,400/9,000		
Net Dimensions H × W × D		mm	1,428 × 1,080 × 480			1,428 × 1,080 × 480		
Weight		kg (lbs)	163 (359)			172 (379)		
Connection Pipe Diameter (Liquid/Gas)		mm	12.7/25.4			12.7/25.4		
Max. Pipe Length (Pre-Charge)		m	100 (30)			100 (30)		
Max. Height Difference			30			30		
Operating Range	Cooling	°CDB	–15 to 46			–15 to 46		
	Heating		–20 to 24			–20 to 24		
Refrigerant	Type (Global Warming Potential)		R410A (2,088)			R410A (2,088)		
	Charge	kg (CO2eq-T)	5.6 (11.693)			7.1 (14.825)		
Separation tube			UTP-SX272A × 1 (Twin)	UTP-SX372A × 1 (Triple)	UTP-SX272A × 1 UTP-236A × 2 (Double Twin)	UTP-SX272A × 1 (Twin)	UTP-SX372A × 1 (Triple)	UTP-SX272A × 1 UTP-SX254A × 2 (Double Twin)

*: That specification is not fixed yet.

- Indoor units of different types and capacity cannot be connected.
- The above specifications apply when used with a cassette type indoor unit.

Dimensions

(Unit: mm)

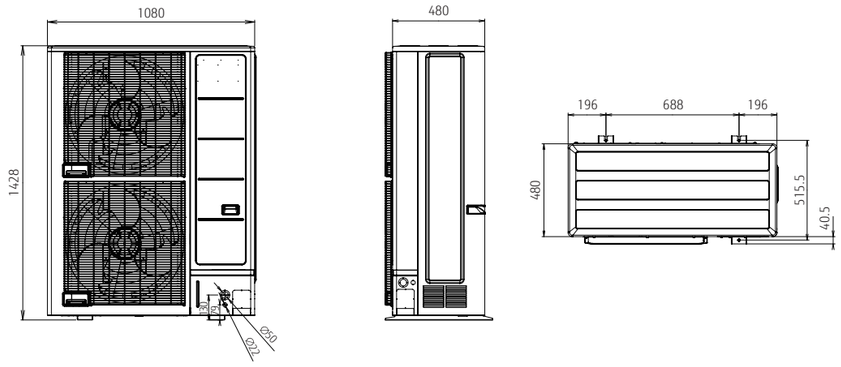

2-unit to 5-unit Multi-split Indoor Units Specifications

Wall-mounted type

NEW



Model name	Indoor unit				ASYG07KGTF ASYG07KGTE	ASYG09KGTF ASYG09KGTE	ASYG12KGTF ASYG09KGTE	ASYG14KGTF ASYG09KGTE
kW Class				kW	2.0	2.5	3.5	4.0
Power Source					Single phase, ~230 V, 50 Hz			
Sound Pressure Level	Cooling	H/M/L/Q	dB(A)		38/33/29/21	40/34/29/21	40/35/30/21	43/36/30/21
	Heating				41/35/31/22	42/36/31/22	42/38/33/22	44/39/33/24
Sound Power Level	Cooling	H	dB(A)		54	55	56	57
	Heating				56	57	58	59
Airflow Rate	Cooling	H/M/L/Q	m^3/h		650/540/430/270	700/560/430/270	700/560/430/270	770/600/450/280
	Heating				720/580/460/330	750/610/470/330	770/640/520/330	800/660/520/340
Net Dimensions				mm	270 × 834 × 215	270 × 834 × 215	270 × 834 × 215	270 × 834 × 215
Weight				kg (lbs)	10 (22)	10 (22)	10 (22)	10 (22)
Connection Pipe Diameter		Liquid/Gas	mm		6.35/9.52	6.35/9.52	6.35/9.52	6.35/9.52

Wall-mounted type

NEW



Model name	Indoor unit				ASYG07KETF ASYG07KETF-B ASYG07KETE ASYG07KETE-B	ASYG09KETF ASYG09KETF-B ASYG09KETE ASYG09KETE-B	ASYG12KETF ASYG12KETF-B ASYG12KETE ASYG12KETE-B	ASYG14KETF ASYG14KETF-B ASYG14KETE ASYG14KETE-B
kW Class				kW	2.0	2.5	3.5	4.0
Power Source					Single phase, ~230 V, 50 Hz			
Sound Pressure Level	Cooling	H/M/L/Q	dB(A)		38/33/29/21	40/34/29/21	40/35/30/21	43/36/30/21
	Heating				41/35/31/22	42/36/31/22	42/38/33/22	44/39/33/24
Sound Power Level	Cooling	H	dB(A)		54	55	55	57
	Heating				56	57	58	59
Airflow Rate	Cooling	H/M/L/Q	m^3/h		650/540/430/270	700/560/430/270	700/560/430/270	770/600/450/280
	Heating				720/580/460/330	750/610/470/330	770/640/520/330	800/660/520/340
Net Dimensions				mm	295 × 950 (wall side: 840) × 230	295 × 950 (wall side: 840) × 230	295 × 950 (wall side: 840) × 230	295 × 950 (wall side: 840) × 230
Weight				kg (lbs)	11(24)	11 (24)	11 (24)	11.5 (25)
Connection Pipe Diameter		Liquid/Gas	mm		6.35/9.52	6.35/9.52	6.35/9.52	6.35/9.52

Wall-mounted type

NEW



Model name	Indoor unit				ASYG07KMCF ASYG07KMCE	ASYG09KMCF ASYG09KMCE	ASYG12KMCF ASYG12KMCE	ASYG14KMCF ASYG14KMCE
kW Class				kW	2.0	2.5	3.5	4.0
Power Source					Single phase, ~230 V, 50 Hz			
Sound Pressure Level	Cooling	H/M/L/Q	dB(A)		38/33/29/21	40/34/29/21	40/35/30/21	43/36/30/21
	Heating				41/35/31/22	42/36/31/22	42/38/33/22	44/39/33/24
Sound Power Level	Cooling	H	dB(A)		54	55	55	57
	Heating				56	57	58	59
Airflow Rate	Cooling	H/M/L/Q	m^3/h		650/540/430/320	700/560/430/320	700/560/430/320	770/600/450/310
	Heating				720/580/460/330	750/610/470/330	780/640/520/330	820/660/520/340
Net Dimensions				mm	270 × 834 × 222	270 × 834 × 222	270 × 834 × 222	270 × 834 × 222
Weight				kg (lbs)	10 (22)	10 (22)	10 (22)	10 (22)
Connection Pipe Diameter		Liquid/Gas	mm		6.35/9.52	6.35/9.52	6.35/9.52	6.35/9.52

Wall-mounted type



Model name	Indoor unit				ASYG18KMTE	ASYG22KMTE	ASYG24KMTE
kW Class				kW	5.0	6.0	7.0
Power Source					Single phase, ~230 V, 50 Hz		
Sound Pressure Level	Cooling	H/M/L/Q	dB(A)		45/40/35/29	48/40/35/29	49/40/35/29
	Heating				46/40/35/29	48/40/35/29	49/40/35/29
Sound Power Level	Cooling	H	dB(A)		60	62	65
	Heating				61	62	65
Airflow Rate	Cooling	H/M/L/Q	m^3/h		980/810/640/510	1,060/810/640/510	1,170/850/640/510
	Heating				1,020/850/640/510	1,060/850/640/510	1,170/850/640/510
Net Dimensions				mm	280 × 980 × 240	280 × 980 × 240	280 × 980 × 240
Weight				kg (lbs)	12.5 (27)	12.5 (27)	12.5 (27)
Connection Pipe Diameter		Liquid/Gas	mm		6.35/12.70	6.35/12.70	6.35/12.70

Floor



Model name	Indoor unit				AGYG09KVCA	AGYG12KVCA	AGYG14KVCA
kW Class				kW	2.5	3.5	4.0
Power Source					Single phase, ~230 V, 50 Hz		
Sound Pressure Level	Cooling	H/M/L/Q	dB(A)		39/34/28/22	42/36/30/22	44/38/31/22
	Heating				39/35/30/22	42/38/32/22	44/39/33/22
Sound Power Level	Cooling	H	dB(A)		52	55	56
	Heating				52	55	56
Airflow Rate	Cooling	H/M/L/Q	m^3/h		530/440/360/270	600/490/380/270	650/520/400/270
	Heating				530/460/380/270	600/510/410/270	650/540/430/270
Net Dimensions				mm	600 × 740 × 200	600 × 740 × 200	600 × 740 × 200
Weight				kg (lbs)	14 (31)	14 (31)	14 (31)
Connection Pipe Diameter		Liquid/Gas	mm		6.35/9.52	6.35/9.52	6.35/9.52

Ceiling



Model name	Indoor unit				ABYG18KRTA	ABYG22KRTA
kW Class				kW	5.0	6.0
Power Source					Single phase, ~230 V, 50 Hz	
Sound Pressure Level	Cooling	H/M/L/Q	dB(A)		38/36/33/31	42/37/34/31
	Heating				38/36/33/31	42/37/34/31
Sound Power Level	Cooling	H	dB(A)		53	57
	Heating				53	57
Airflow Rate	Cooling	H/M/L/Q	m^3/h		840/790/710/650	900/790/710/650
	Heating				840/790/710/650	900/790/710/650
Net Dimensions				mm	235 × 1,080 × 705	235 × 1,080 × 705
Weight				kg (lbs)	24(52)	24(52)
Connection Pipe Diameter		Liquid/Gas	mm		6.35/12.70	6.35/12.70

Compact Cassette Grid Type



Model name	Indoor unit				AUXG07KVLA	AUXG09KVLA	AUXG12KVLA	AUXG14KVLA	AUXG18KVLA	AUXG22KVLA
kW Class				kW	2.0	2.5	3.5	4.0	5.0	6.0
Power Source					Single phase, ~230 V, 50 Hz					
Sound Pressure Level	Cooling	H/M/L/Q	dB(A)		33/31/29/27	33/31/29/27	37/34/31/28	38/35/32/29	38/35/32/29	44/42/36/30
	Heating				34/32/29/27	34/32/29/27	37/34/31/29	43/38/34/30	43/38/34/30	45/43/40/33
Sound Power Level	Cooling	H	dB(A)		46	46	49	50	50	56
	Heating				47	47	49	55	55	57
Airflow Rate	Cooling	H/M/L/Q	m^3/h		540/490/440/390	540/490/440/390	610/530/470/410	680/580/490/410	680/580/490/410	830/740/600/450
	Heating				540/490/440/390	540/490/440/390	610/530/470/410	790/680/580/450	790/680/580/450	860/760/700/530
Net Dimensions				mm	245 × 570 × 570	245 × 570 × 570	245 × 570 × 570	245 × 570 × 570	245 × 570 × 570	245 × 570 × 570
Weight				kg (lbs)	15 (33)	15 (33)	15 (33)	15 (33)	15 (33)	16 (35)
Panel					UTG-UFYF-W	UTG-UFYF-W	UTG-UFYF-W	UTG-UFYF-W	UTG-UFYF-W	UTG-UFYF-W
Connection Pipe Diameter		Liquid/Gas	mm		6.35/9.52	6.35/9.52	6.35/9.52	6.35/9.52	6.35/12.70	6.35/12.70

Mini duct

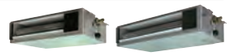

Model name	Indoor unit				ARXG07KSLAP	ARXG09KSLAP	ARXG12KSLAP	ARXG14KSLAP	ARXG18KSLAP
kW Class				kW	2.0	2.5	3.5	4.0	5.0
Power Source					Single phase, ~230 V, 50 Hz				
Sound Pressure Level	Cooling	H/M/L/Q	dB(A)		29/26/24/23	29/26/24/23	31/27/25/23	35/30/27/23	33/29/26/23
	Heating				29/26/24/23	29/26/24/23	31/27/25/23	35/30/27/23	33/29/26/23
Sound Power Level	Cooling	H	dB(A)		52	54	55	60	58
	Heating				53	56	57	62	59
Airflow Rate	Cooling	H/M/L/Q	m^3/h		550/440/390/360	600/450/400/360	650/490/430/360	800/640/530/360	940/750/540/480
	Heating				550/440/390/360	600/450/400/360	650/490/430/360	800/640/530/360	940/750/540/480
Net Dimensions				mm	198 × 700 × 450	198 × 700 × 450	198 × 700 × 450	198 × 700 × 450	198 × 900 × 450
Weight				kg (lbs)	15.5 (34)	15.5 (34)	15.5 (34)	15.5 (34)	18.5 (40)
Connection Pipe Diameter		Liquid/Gas	mm		6.35/9.52	6.35/9.52	6.35/9.52	6.35/9.52	6.35/12.70
External static pressure			Pa		0 to 30	0 to 30	0 to 30	0 to 50	0 to 50
Drain pump					Standard	Standard	Standard	Standard	Standard

Slim duct

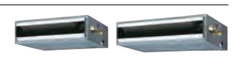

Model name	Indoor unit				ARXG07KLLAP	ARXG09KLLAP	ARXG12KLLAP	ARXG14KLLAP	ARXG18KLLAP
kW Class				kW	2.0	2.5	3.5	4.0	5.0
Power Source					Single phase, ~230 V, 50 Hz				
Sound Pressure Level	Cooling	H/M/L/Q	dB(A)		28/26/25/24	28/27/26/25	29/28/27/26	32/30/28/26	32/30/29/27
	Heating				28/26/25/24	28/26/25/24	29/28/27/24	32/30/28/25	32/30/29/27
Sound Power Level	Cooling	H	dB(A)		57	57	58	60	58
	Heating				57	57	58	60	58
Airflow Rate	Cooling	H/M/L/Q	m^3/h		550/490/470/440	600/550/500/450	650/600/550/480	800/700/600/480	940/880/820/750
	Heating				550/490/470/440	600/550/500/450	650/600/550/480	800/700/600/480	940/880/820/750
Net Dimensions				mm	198 × 700 × 620	198 × 700 × 620	198 × 700 × 620	198 × 700 × 620	198 × 900 × 620
Weight				kg (lbs)	16 (35)	17 (37)	17 (37)	17 (37)	20 (44)
Connection Pipe Diameter		Liquid/Gas	mm		6.35/9.52	6.35/9.52	6.35/9.52	6.35/9.52	6.35/12.70
External static pressure			Pa		0 to 90	0 to 90	0 to 90	0 to 90	0 to 90
Drain pump					Standard	Standard	Standard	Standard	Standard

Medium Static Pressure Duct



Model name	Indoor unit				ARXG22KMLB
kW Class				kW	6.0
Power Source					Single phase, ~230 V, 50 Hz
Sound Pressure Level	Cooling	H/M/L/Q	dB(A)		31/29/27/25
	Heating				31/29/27/25
Sound Power Level	Cooling	H	dB(A)		60
	Heating				62
Airflow Rate	Cooling	H/M/L/Q	m^3/h		1,100/910/750/580
	Heating				1,100/910/750/580
Net Dimensions				mm	270 × 1,135 × 700
Weight				kg (lbs)	35 (77)
Connection Pipe Diameter		Liquid/Gas	mm		6.35/12.70
External static pressure			Pa		30 to 150
Drain pump					Standard

REFRIGERANT R410A

6-unit Multi-split Indoor Units Specifications

Compact wall-mounted



Model name	Indoor unit			ASYG07LUCA	ASYG09LUCA	ASYG12LUCA	ASYG14LUCA
kW Class			kW	2.0	2.5	3.5	4.0
Power Source				Single phase, ~230 V, 50 Hz			
Sound Pressure Level	Cooling	H/M/L/Q	dB(A)	35/30/28/21	36/32/28/21	37/34/31/21	41/36/33/25
	Heating			35/30/28/21	36/32/28/21	37/34/31/21	41/36/34/27
Sound Power Level	Cooling	H	dB(A)	53	54	55	59
	Heating			53	54	55	59
Airflow Rate	Cooling	H/M/L/Q	m^3/h	570/520/470/330	600/550/470/330	660/600/530/330	710/640/570/390
	Heating			570/520/470/330	600/550/470/330	660/600/530/330	710/640/590/430
Net Dimensions			mm	282 × 870 × 185	282 × 870 × 185	282 × 870 × 185	282 × 870 × 185
Weight			kg (lbs)	9.5 (21)	9.5 (21)	9.5 (21)	9.5 (21)
Connection Pipe Diameter		Liquid/Gas	mm	6.35/9.52	6.35/9.52	6.35/9.52	6.35/12.70

Wall-mounted type



Model name	Indoor unit			ASYG18LFCA	ASYG24LFCC
kW Class			kW	5.0	7.0
Power Source				Single phase, ~230 V, 50 Hz	
Sound Pressure Level	Cooling	H/M/L/Q	dB(A)	43/37/33/26	49/42/37/33
	Heating			42/37/33/25	48/42/37/33
Sound Power Level	Cooling	H	dB(A)	58	64
	Heating			58	64
Airflow Rate	Cooling	H/M/L/Q	m^3/h	900/740/620/550	1,120/900/740/620
	Heating			900/740/620/550	1,100/900/740/620
Net Dimensions			mm	320 × 998 × 238	320 × 998 × 238
Weight			kg (lbs)	14 (31)	14 (31)
Connection Pipe Diameter		Liquid/Gas	mm	6.35/12.70	6.35/15.88

Compact wall-mounted



Model name	Indoor unit			ASYG07LMCE	ASYG09LMCE	ASYG12LMCE	ASYG14LMCE
kW Class			kW	2.0	2.5	3.5	4.0
Power Source				Single phase, ~230 V, 50 Hz			
Sound Pressure Level	Cooling	H/M/L/Q	dB(A)	36/32/29/21	37/33/29/21	40/36/30/21	42/38/33/25
	Heating			36/32/29/22	37/33/29/22	40/36/31/22	42/38/35/27
Sound Power Level	Cooling	H	dB(A)	51	52	54	56
	Heating			51	52	55	57
Airflow Rate	Cooling	H/M/L/Q	m^3/h	560/500/430/310	600/520/430/310	660/560/450/310	730/600/530/360
	Heating			560/500/430/330	600/520/430/330	660/560/470/330	730/615/560/375
Net Dimensions			mm	270 × 870 × 204	270 × 870 × 204	270 × 870 × 204	270 × 870 × 204
Weight			kg (lbs)	8.5 (19)	8.5 (19)	8.5 (19)	8.5 (19)
Connection Pipe Diameter		Liquid/Gas	mm	6.35/9.52	6.35/9.52	6.35/9.52	6.35/12.70

Floor



Model name	Indoor unit			AGYG09LVCA	AGYG12LVCA	AGYG14LVCA
kW Class			kW	2.5	3.5	4.0
Power Source				Single phase, ~230 V, 50 Hz		
Sound Pressure Level	Cooling	H/M/L/Q	dB(A)	39/34/28/22	42/36/30/22	44/38/31/22
	Heating			39/35/30/22	42/38/32/22	44/39/33/22
Sound Power Level	Cooling	H	dB(A)	52	55	56
	Heating			52	55	56
Airflow Rate	Cooling	H/M/L/Q	m^3/h	530/440/360/270	600/490/380/270	650/520/400/270
	Heating			530/460/380/270	600/510/410/270	650/540/430/270
Net Dimensions			mm	600 × 740 × 200	600 × 740 × 200	600 × 740 × 200
Weight			kg (lbs)	14 (31)	14 (31)	14 (31)
Connection Pipe Diameter		Liquid/Gas	mm	6.35/9.52	6.35/9.52	6.35/12.70

Floor ceiling



Model name	Indoor unit			ABYG14LVTA	ABYG18LVTB
kW Class			kW	4.0	5.0
Power Source				Single phase, ~230 V, 50 Hz	
Sound Pressure Level	Cooling	H/M/L/Q	dB(A)	36/34/33/29 (Under ceiling) 39/37/36/32 (Floor console)	41/38/34/32 (Under ceiling) 44/41/37/35 (Floor console)
	Heating			36/34/33/29 (Under ceiling) 39/37/36/32 (Floor console)	41/38/34/32 (Under ceiling) 44/41/37/35 (Floor console)
Sound Power Level	Cooling	H	dB(A)	51	55
	Heating			51	55
Airflow Rate	Cooling	H/M/L/Q	m^3/h	640/590/540/480	780/700/560/500
	Heating			640/590/540/480	780/700/560/500
Net Dimensions			mm	199 × 990 × 655	199 × 990 × 655
Weight			kg (lbs)	27 (60)	27 (60)
Connection Pipe Diameter		Liquid/Gas	mm	6.35/12.70	6.35/12.70

Compact cassette



Model name	Indoor unit			AUYG07LVLA	AUYG09LVLA	AUYG12LVLB	AUYG14LVLB	AUYG18LVLB
kW Class			kW	2.0	2.5	3.5	4.0	5.0
Power Source				Single phase, ~230 V, 50 Hz				
Sound Pressure Level	Cooling	H/M/L/Q	dB(A)	33/31/29/27	33/31/29/27	37/33/31/28	40/35/32/29	42/37/33/29
	Heating			34/32/29/27	34/32/29/27	37/33/31/28	40/37/34/29	44/40/37/30
Sound Power Level	Cooling	H	dB(A)	46	46	49	52	54
	Heating			47	47	49	52	56
Airflow Rate	Cooling	H/M/L/Q	m^3/h	540/490/440/390	540/490/440/390	610/530/470/410	680/580/490/410	750/610/520/410
	Heating			540/490/440/390	540/490/440/390	610/530/470/410	700/620/550/430	800/710/600/450
Net Dimensions			mm	245 × 570 × 570	245 × 570 × 570	245 × 570 × 570	245 × 570 × 570	245 × 570 × 570
Weight			kg (lbs)	15 (33)	15 (33)	15 (33)	15 (33)	15 (33)
Panel				UTG-UFYD-W				
Connection Pipe Diameter		Liquid/Gas	mm	6.35/9.52	6.35/9.52	6.35/9.52	6.35/12.70	6.35/12.70

Mini duct



Model name	Indoor unit			ARYG07LSLAP	ARYG09LSLAP	ARYG12LSLAP	ARYG14LSLAP	ARYG18LSLAP
kW Class			kW	2.0	2.5	3.5	4.0	5.0
Power Source				Single phase, ~230 V, 50 Hz				
Sound Pressure Level	Cooling	H/M/L/Q	dB(A)	29/26/24/23	29/26/24/23	31/27/25/23	35/30/27/23	33/29/26/23
	Heating			29/26/24/23	29/26/24/23	31/27/25/23	35/30/27/23	33/29/26/23
Sound Power Level	Cooling	H	dB(A)	52	54	55	60	58
	Heating			53	56	57	62	59
Airflow Rate	Cooling	H/M/L/Q	m^3/h	550/440/390/360	600/450/400/360	650/490/430/360	800/640/530/360	940/750/540/480
	Heating			550/440/390/360	600/450/400/360	650/490/430/360	800/640/530/360	940/750/540/480
Net Dimensions			mm	198 × 700 × 450	198 × 700 × 450	198 × 700 × 450	198 × 700 × 450	198 × 900 × 450
Weight			kg (lbs)	15.5 (33)				18.5 (41)
Connection Pipe Diameter		Liquid/Gas	mm	6.35/9.52			6.35/12.70	
External static pressure			Pa	0 to 30			0 to 50	
Drain pump				Standard				

Slim duct



Model name	Indoor unit			ARYG07LLTA	ARYG09LLTA	ARYG12LLTB	ARYG14LLTB	ARYG18LLTB
kW Class			kW	2.0	2.5	3.5	4.0	5.0
Power Source				Single phase, ~230 V, 50 Hz				
Sound Pressure Level	Cooling	H/M/L/Q	dB(A)	28/26/25/24	28/27/26/25	29/28/27/26	32/30/28/26	32/31/30/29
	Heating			28/26/25/24	28/26/25/24	29/28/27/24	33/30/28/25	33/32/31/29
Sound Power Level	Cooling	H	dB(A)	57	57	58	60	58
	Heating			57	57	58	61	59
Airflow Rate	Cooling	H/M/L/Q	m^3/h	550/490/470/440	600/550/500/450	650/600/550/480	800/700/600/480	940/880/820/750
	Heating			550/490/470/440	600/550/500/450	650/600/550/480	800/700/600/480	940/880/820/750
Net Dimensions			mm	198 × 700 × 620	198 × 700 × 620	198 × 700 × 620	198 × 700 × 620	198 × 900 × 620
Weight			kg (lbs)	17 (37)	19 (42)	19 (42)	19 (42)	23 (51)
Connection Pipe Diameter		Liquid/Gas	mm	6.35/9.52	6.35/9.52	6.35/9.52	6.35/12.7	6.35/12.70
External static pressure			Pa	0 to 90				
Drain pump				Standard				

2-unit Multi-split Combination Table–Cooling/Heating

2-unit Multi-split cooling

AOYG14KBTA2	Combination of Indoor Units		Cooling Operation							
			Cooling Capacity			Input Power (Min. - Max.)	EER	Seasonal Data		
			Unit 1	Unit 2	Total Capacity (Min. - Max.)			Pdesign	SEER	Energy efficiency class
			kW	kW	kW	kW		kW		
2-unit connection	7	7	2.00	2.00	4.00 (1.4-4.6)	0.97 (0.25-1.20)	4.12	4.0	8.7	A+++
	7	9	1.75	2.25	4.00 (1.4-4.6)	0.97 (0.25-1.20)	4.12	4.0	8.7	A+++
	7	12	1.47	2.53	4.00 (1.4-4.6)	0.97 (0.25-1.20)	4.12	4.0	8.7	A+++
	9	9	2.00	2.00	4.00 (1.4-4.6)	0.97 (0.25-1.20)	4.12	4.0	8.7	A+++
	9	12	1.71	2.29	4.00 (1.4-4.6)	0.97 (0.25-1.20)	4.12	4.0	8.7	A+++

Notes: •7: 7000 Btu/h/9: 9000 Btu/h/12: 12000 Btu/h models
•The above specifications apply when connected with a wall-mounted [KG] unit.
•2 or more indoor units should be connected.
•Cooling capacity is determined based on 27°CDB/19°CWB (indoor temperature) and 35°CDB (outdoor temperature).
•Pipe Length: 5 m, Height difference: 0 m (Outdoor unit to Indoor unit)
•Total capacity of indoor units connected must be between 4.0 kW and 6.0 kW.

AOYG18KBTA2	Combination of Indoor Units		Cooling Operation							
			Cooling Capacity			Input Power (Min. - Max.)	EER	Seasonal Data		
			Unit 1	Unit 2	Total Capacity (Min. - Max.)			Pdesign	SEER	Energy efficiency class
			kW	kW	kW	kW		kW		
2-unit connection	7	7	2.00	2.00	4.00 (1.7-5.0)	0.92 (0.25-1.23)	4.35	4.0	8.8	A+++
	7	9	2.00	2.50	4.50 (1.7-5.7)	1.07 (0.25-1.45)	4.22	4.5	8.7	A+++
	7	12	1.84	3.16	5.00 (1.7-5.8)	1.24 (0.25-1.55)	4.03	5.0	8.6	A+++
	7	14	1.67	3.33	5.00 (1.7-5.8)	1.24 (0.25-1.55)	4.03	5.0	8.6	A+++
	9	9	2.50	2.50	5.00 (1.7-5.8)	1.24 (0.25-1.55)	4.03	5.0	8.6	A+++
	9	12	2.14	2.86	5.00 (1.7-5.8)	1.24 (0.25-1.55)	4.03	5.0	8.6	A+++
	9	14	1.96	3.04	5.00 (1.7-5.8)	1.24 (0.25 - 1.55)	4.03	5.0	8.6	A+++
	12	12	2.50	2.50	5.00 (1.7-5.8)	1.24 (0.25-1.55)	4.03	5.0	8.6	A+++
	12	14	2.31	2.69	5.00 (1.7-5.8)	1.24 (0.25-1.55)	4.03	5.0	8.6	A+++

Notes: •7: 7000 Btu/h/9:9000 Btu/h/12: 12000 Btu/h/14: 14000 Btu/h models
•The above specifications apply when connected with a wall-mounted [KG] unit.
•2 or more indoor units should be connected.
•Cooling capacity is determined based on 27°CDB/19°CWB (indoor temperature) and 35°CDB (outdoor temperature).
•Pipe Length: 5 m, Height difference: 0 m (Outdoor unit to Indoor unit)
•Total capacity of indoor units connected must be between 4.0 kW and 7.5 kW.

2-unit Multi-split heating

AOYG14KBTA2	Combination of Indoor Units		Heating Operation							
			Heating Capacity			Input Power (Min. - Max.)	COP	Seasonal Data		
			Unit 1	Unit 2	Total Capacity (Min. - Max.)			Pdesign	SCOP	Energy efficiency class
			kW	kW	kW	kW		kW		
2-unit connection	7	7	2.20	2.20	4.40 (1.1-5.5)	0.95 (0.25-1.65)	4.63	3.5	4.7	A++
	7	9	1.92	2.48	4.40 (1.1-5.5)	0.95 (0.25-1.65)	4.63	3.5	4.7	A++
	7	12	1.62	2.78	4.40 (1.1-5.5)	0.95 (0.25-1.65)	4.63	3.5	4.7	A++
	9	9	2.20	2.20	4.40 (1.1-5.5)	0.95 (0.25-1.65)	4.63	3.5	4.7	A++
	9	12	1.89	2.51	4.40 (1.1-5.5)	0.95 (0.25-1.65)	4.63	3.5	4.7	A++

Notes: •7: 7000 Btu/h/9: 9000 Btu/h/12: 12000 Btu/h models
•The above specifications apply when connected with a wall-mounted [KG] unit.
•2 or more indoor units should be connected.
•Heating capacity is determined based on 20°CDB (indoor temperature) and 7°CDB/6°CWB (outdoor temperature).
•Pipe Length: 5 m, Height difference: 0 m (Outdoor unit to Indoor unit)
•Total capacity of indoor units connected must be between 4.0 kW and 6.0 kW.

AOYG18KBTA2	Combination of Indoor Units		Heating Operation							
			Heating Capacity			Input Power (Min. - Max.)	COP	Seasonal Data		
			Unit 1	Unit 2	Total Capacity (Min. - Max.)			Pdesign	SCOP	Energy efficiency class
			kW	kW	kW	kW		kW		
2-unit connection	7	7	2.40	2.40	4.80 (1.7-5.6)	0.99 (0.25-1.35)	4.85	3.8	4.7	A++
	7	9	2.40	3.00	5.40 (1.7-6.4)	1.15 (0.25-1.60)	4.70	4.0	4.7	A++
	7	12	2.06	3.54	5.60 (1.7-7.0)	1.22 (0.25-1.80)	4.59	4.2	4.7	A++
	7	14	1.87	3.73	5.60 (1.7-7.0)	1.22 (0.25-1.80)	4.59	4.2	4.7	A++
	9	9	2.80	2.80	5.60 (1.7-7.0)	1.22 (0.25-1.80)	4.59	4.2	4.7	A++
	9	12	2.40	3.20	5.60 (1.7-7.0)	1.22 (0.25-1.80)	4.59	4.2	4.7	A++
	9	14	2.19	3.41	5.60 (1.7-7.0)	1.22 (0.25-1.80)	4.59	4.2	4.7	A++
	12	12	2.80	2.80	5.60 (1.7-7.0)	1.22 (0.25-1.80)	4.59	4.2	4.7	A++
	12	14	2.58	3.02	5.60 (1.7-7.0)	1.22 (0.25-1.80)	4.59	4.2	4.7	A++

Notes: •7: 7000 Btu/h/9:9000 Btu/h/12: 12000 Btu/h/14: 14000 Btu/h models
•The above specifications apply when connected with a wall-mounted [KG] unit.
•2 or more indoor units should be connected.
•Heating capacity is determined based on 20°CDB (indoor temperature) and 7°CDB/6°CWB (outdoor temperature).
•Pipe Length: 5 m, Height difference: 0 m (Outdoor unit to Indoor unit)
•Total capacity of indoor units connected must be between 4.0 kW and 7.5 kW.

3-unit Multi-split Combination Table–Cooling/Heating

3-unit Multi-split cooling

AOYG18KBTA3	Combination of Indoor Units			Cooling Operation								
				Cooling Capacity				Input Power (Min. - Max.)	EER	Seasonal Data		
				Unit 1	Unit 2	Unit 3	Total Capacity (Min. - Max.)			Pdesign	SEER	Energy efficiency
				kW	kW	kW	kW	kW		kW		
2-unit connection	7	7	-	2.00	2.00	-	4.00 (1.8-5.0)	0.86 (0.35-1.35)	4.65	4.0	8.3	A++
	7	9	-	2.00	2.50	-	4.50 (1.8-5.7)	1.03 (0.35-1.54)	4.36	4.5	8.2	A++
	7	12	-	1.99	3.41	-	5.40 (1.8-6.8)	1.41 (0.35-1.85)	3.83	5.4	8.0	A++
	7	14	-	1.80	3.60	-	5.40 (1.8-7.0)	1.41 (0.35-1.90)	3.83	5.4	8.0	A++
	9	9	-	2.50	2.50	-	5.00 (1.8-6.4)	1.23 (0.35-1.74)	4.06	5.0	8.1	A++
	9	12	-	2.31	3.09	-	5.40 (1.8-7.0)	1.41 (0.35-1.90)	3.83	5.4	8.0	A++
	9	14	-	2.11	3.29	-	5.40 (1.8-7.0)	1.41 (0.35-1.90)	3.83	5.4	8.0	A++
	12	12	-	2.70	2.70	-	5.40 (1.8-7.0)	1.41 (0.35-1.90)	3.83	5.4	8.0	A++
	12	14	-	2.49	2.91	-	5.40 (1.8-7.0)	1.41 (0.35-1.90)	3.83	5.4	8.0	A++
	14	14	-	2.70	2.70	-	5.40 (1.8-7.0)	1.41 (0.35-1.90)	3.83	5.4	8.0	A++
3-unit connection	7	7	7	1.80	1.80	1.80	5.40 (1.8-7.0)	1.13 (0.35-1.90)	4.78	5.4	8.6	A+++
	7	7	9	1.64	1.64	2.12	5.40 (1.8-7.0)	1.13 (0.35-1.90)	4.78	5.4	8.6	A+++
	7	7	12	1.45	1.45	2.50	5.40 (1.8-7.0)	1.13 (0.35-1.90)	4.78	5.4	8.6	A+++
	7	7	14	1.35	1.35	2.70	5.40 (1.8-7.0)	1.13 (0.35-1.90)	4.78	5.4	8.6	A+++
	7	9	9	1.52	1.94	1.94	5.40 (1.8-7.0)	1.13 (0.35-1.90)	4.78	5.4	8.6	A+++
	7	9	12	1.35	1.74	2.31	5.40 (1.8-7.0)	1.13 (0.35-1.90)	4.78	5.4	8.6	A+++
	7	9	14	1.26	1.62	2.52	5.40 (1.8-7.0)	1.13 (0.35-1.90)	4.78	5.4	8.6	A+++
	9	9	9	1.80	1.80	1.80	5.40 (1.8-7.0)	1.13 (0.35-1.90)	4.78	5.4	8.6	A+++
	9	9	12	1.62	1.62	2.16	5.40 (1.8-7.0)	1.13 (0.35-1.90)	4.78	5.4	8.6	A+++

AOYG24KBTA3	Combination of Indoor Units			Cooling Operation								
				Cooling Capacity				Input Power (Min. - Max.)	EER	Seasonal Data		
				Unit 1	Unit 2	Unit 3	Total Capacity (Min. - Max.)			Pdesign	SEER	Energy efficiency
				kW	kW	kW	kW	kW		kW		
2-unit connection	7	7	-	2.00	2.00	-	4.00 (1.8-5.0)	0.86 (0.35-1.35)	4.65	4.0	8.3	A++
	7	9	-	2.00	2.50	-	4.50 (1.8-5.7)	1.03 (0.35-1.54)	4.36	4.5	8.2	A++
	7	12	-	2.00	3.50	-	5.50 (1.8-6.8)	1.46 (0.35-1.85)	3.77	5.5	8.0	A++
	7	14	-	2.00	4.00	-	6.00 (1.8-7.5)	1.73 (0.35-2.20)	3.48	6.0	7.6	A++
	7	18	-	1.90	4.90	-	6.80 (1.8-8.5)	2.26 (0.35-2.65)	3.01	6.8	6.9	A++
	9	9	-	2.50	2.50	-	5.00 (1.8-6.4)	1.23 (0.35-1.74)	4.06	5.0	8.1	A++
	9	12	-	2.50	3.50	-	6.00 (1.8-7.5)	1.73 (0.35-2.20)	3.48	6.0	7.6	A++
	9	14	-	2.50	4.00	-	6.50 (1.8-8.2)	2.04 (0.35-2.46)	3.19	6.5	7.2	A++
	9	18	-	2.27	4.53	-	6.80 (1.8-8.5)	2.26 (0.35-2.65)	3.01	6.8	6.9	A++
	12	12	-	3.40	3.40	-	6.80 (1.8-8.5)	2.26 (0.35-2.65)	3.01	6.8	6.9	A++
	12	14	-	3.14	3.66	-	6.80 (1.8-8.5)	2.26 (0.35-2.65)	3.01	6.8	6.9	A++
	12	18	-	2.72	4.08	-	6.80 (1.8-8.5)	2.26 (0.35-2.65)	3.01	6.8	6.9	A++
	14	14	-	3.40	3.40	-	6.80 (1.8-8.5)	2.26 (0.35-2.65)	3.01	6.8	6.9	A++
	14	18	-	2.98	3.82	-	6.80 (1.8-8.5)	2.26 (0.35-2.65)	3.01	6.8	6.9	A++
3-unit connection	7	7	7	2.00	2.00	2.00	6.00 (1.8-7.5)	1.37 (0.35-2.20)	4.37	6.0	8.6	A+++
	7	7	9	2.00	2.00	2.50	6.50 (1.8-8.2)	1.59 (0.35-2.46)	4.08	6.5	8.5	A+++
	7	7	12	1.83	1.83	3.14	6.80 (1.8-8.5)	1.74 (0.35-2.65)	3.90	6.8	8.5	A+++
	7	7	14	1.70	1.70	3.40	6.80 (1.8-8.5)	1.74 (0.35-2.65)	3.90	6.8	8.5	A+++
	7	7	18	1.49	1.49	3.82	6.80 (1.8-8.5)	1.74 (0.35-2.65)	3.90	6.8	8.5	A+++
	7	9	9	1.90	2.45	2.45	6.80 (1.8-8.5)	1.74 (0.35-2.65)	3.90	6.8	8.5	A+++
	7	9	12	1.70	2.19	2.91	6.80 (1.8-8.5)	1.74 (0.35-2.65)	3.90	6.8	8.5	A+++
	7	9	14	1.59	2.04	3.17	6.80 (1.8-8.5)	1.74 (0.35-2.65)	3.90	6.8	8.5	A+++
	7	9	18	1.40	1.80	3.60	6.80 (1.8-8.5)	1.74 (0.35-2.65)	3.90	6.8	8.5	A+++
	7	12	12	1.54	2.63	2.63	6.80 (1.8-8.5)	1.74 (0.35-2.65)	3.90	6.8	8.5	A+++
	7	12	14	1.44	2.47	2.89	6.80 (1.8-8.5)	1.74 (0.35-2.65)	3.90	6.8	8.5	A+++
	7	14	14	1.36	2.72	2.72	6.80 (1.8-8.5)	1.74 (0.35-2.65)	3.90	6.8	8.5	A+++
	9	9	[9]	2.27	2.27	2.27	6.80 (1.8-8.5)	1.74 (0.35-2.65)	3.90	6.8	8.5	A+++
	9	9	12	2.04	2.04	2.72	6.80 (1.8-8.5)	1.74 (0.35-2.65)	3.90	6.8	8.5	A+++
	9	9	14	1.91	1.91	2.98	6.80 (1.8-8.5)	1.74 (0.35-2.65)	3.90	6.8	8.5	A+++
	9	9	18	1.70	1.70	3.40	6.80 (1.8-8.5)	1.74 (0.35-2.65)	3.90	6.8	8.5	A+++
	9	12	12	1.86	2.47	2.47	6.80 (1.8-8.5)	1.74 (0.35-2.65)	3.90	6.8	8.5	A+++
	9	12	14	1.75	2.33	2.72	6.80 (1.8-8.5)	1.74 (0.35-2.65)	3.90	6.8	8.5	A+++
	12	12	12	2.27	2.27	2.27	6.80 (1.8-8.5)	1.74 (0.35-2.65)	3.90	6.8	8.5	A+++

Notes: •7: 7000 Btu/h/9: 9000 Btu/h/12: 12000 Btu/h/14: 14000 Btu/h/18: 18000 Btu/h models
•The above specifications apply when connected with a wall-mounted unit.
•2 or more indoor units should be connected.
•Cooling capacity is determined based on 27°CDB/19°CWB (indoor temperature) and 35°CDB (outdoor temperature).
•Pipe Length: 5 m, Height difference: 0 m (Outdoor unit to Indoor unit)
•Total capacity of indoor units connected must be between 4.0 kW and 10.5 kW.

3-unit Multi-split heating

AOYG18KBTA3	Combination of Indoor Units			Heating Operation								
				Heating Capacity				Input Power (Min. - Max.)	COP	Seasonal Data		
				Unit 1	Unit 2	Unit 3	Total Capacity (Min. - Max.)			Pdesign	SCOP	Energy efficiency
				kW	kW	kW	kW	kW		kW		
2-unit connection	7	7	-	2.40	2.40	-	4.80 (2.0-5.6)	1.00 (0.25-1.30)	4.80	4.0	4.2	A+
	7	9	-	2.40	3.00	-	5.40 (2.0-6.4)	1.21 (0.25-1.48)	4.45	4.0	4.2	A+
	7	12	-	2.40	4.20	-	6.60 (2.0-7.6)	1.66 (0.25-1.76)	3.98	5.0	4.0	A+
	7	14	-	2.27	4.53	-	6.80 (2.0-8.0)	1.77 (0.25-1.85)	3.84	5.0	4.0	A+
	9	9	-	3.00	3.00	-	6.00 (2.0-7.2)	1.44 (0.25-1.67)	4.17	4.5	4.1	A+
	9	12	-	2.91	3.89	-	6.80 (2.0-8.0)	1.77 (0.25-1.85)	3.84	5.0	4.0	A+
	9	14	-	2.66	4.14	-	6.80 (2.0-8.0)	1.77 (0.25-1.85)	3.84	5.0	4.0	A+
	12	12	-	3.40	3.40	-	6.80 (2.0-8.0)	1.77 (0.25-1.85)	3.84	5.0	4.0	A+
	12	14	-	3.14	3.66	-	6.80 (2.0-8.0)	1.77 (0.25-1.85)	3.84	5.0	4.0	A+
	14	14	-	3.40	3.40	-	6.80 (2.0-8.0)	1.77 (0.25-1.85)	3.84	5.0	4.0	A+
3-unit connection	7	7	7	2.27	2.27	2.27	6.80 (2.0-8.0)	1.39 (0.25-1.85)	4.89	5.0	4.7	A++
	7	7	9	2.07	2.07	2.66	6.80 (2.0-8.0)	1.39 (0.25-1.85)	4.89	5.0	4.7	A++
	7	7	12	1.83	1.83	3.14	6.80 (2.0-8.0)	1.39 (0.25-1.85)	4.89	5.0	4.7	A++
	7	7	14	1.70	1.70	3.40	6.80 (2.0-8.0)	1.39 (0.25-1.85)	4.89	5.0	4.7	A++
	7	9	9	1.90	2.45	2.45	6.80 (2.0-8.0)	1.39 (0.25-1.85)	4.89	5.0	4.7	A++
	7	9	12	1.70	2.19	2.91	6.80 (2.0-8.0)	1.39 (0.25-1.85)	4.89	5.0	4.7	A++
	7	9	14	1.59	2.04	3.17	6.80 (2.0-8.0)	1.39 (0.25-1.85)	4.89	5.0	4.7	A++
	9	9	9	2.27	2.27	2.27	6.80 (2.0-8.0)	1.39 (0.25-1.85)	4.89	5.0	4.7	A++
	9	9	12	2.04	2.04	2.72	6.80 (2.0-8.0)	1.39 (0.25-1.85)	4.89	5.0	4.7	A++

AOYG24KBTA3	Combination of Indoor Units			Heating Operation								
				Heating Capacity				Input Power (Min. - Max.)	COP	Seasonal Data		
				Unit 1	Unit 2	Unit 3	Total Capacity (Min. - Max.)			Pdesign	SCOP	Energy efficiency
				kW	kW	kW	kW	kW		kW		
2-unit connection	7	7	-	2.40	2.40	-	4.80 (2.0-5.6)	1.00 (0.25-1.30)	4.80	4.0	4.2	A+
	7	9	-	2.40	3.00	-	5.40 (2.0-6.4)	1.21 (0.25-1.48)	4.45	4.0	4.2	A+
	7	12	-	2.40	4.20	-	6.60 (2.0-7.6)	1.66 (0.25-1.76)	3.98	5.0	4.0	A+
	7	14	-	2.40	4.80	-	7.20 (2.0-8.4)	1.86 (0.25-2.07)	3.87	5.4	4.0	A+
	7	18	-	2.16	5.54	-	7.70 (2.0-9.2)	2.01 (0.25-2.35)	3.83	5.8	4.0	A+
	9	9	-	3.00	3.00	-	6.00 (2.0-7.2)	1.44 (0.25-1.67)	4.17	4.5	4.1	A+
	9	12	-	3.00	4.20	-	7.20 (2.0-8.4)	1.86 (0.25-2.07)	3.87	5.4	4.0	A+
	9	14	-	2.96	4.74	-	7.70 (2.0-9.2)	2.01 (0.25-2.35)	3.83	5.8	4.0	A+
	9	18	-	2.57	5.13	-	7.70 (2.0-9.2)	2.01 (0.25-2.35)	3.83	5.8	4.0	A+
	12	12	-	3.85	3.85	-	7.70 (2.0-9.2)	2.01 (0.25-2.35)	3.83	5.8	4.0	A+
	12	14	-	3.55	4.15	-	7.70 (2.0-9.2)	2.01 (0.25-2.35)	3.83	5.8	4.0	A+
	12	18	-	3.08	4.62	-	7.70 (2.0-9.2)	2.01 (0.25-2.35)	3.83	5.8	4.0	A+
	14	14	-	3.85	3.85	-	7.70 (2.0-9.2)	2.01 (0.25-2.35)	3.83	5.8	4.0	A+
	14	18	-	3.37	4.33	-	7.70 (2.0-9.2)	2.01 (0.25-2.35)	3.83	5.8	4.0	A+
3-unit connection	7	7	7	2.40	2.40	2.40	7.20 (2.0-8.4)	1.61 (0.25-2.07)	4.48	5.4	4.7	A++
	7	7	9	2.40	2.40	3.00	7.80 (2.0-9.2)	1.76 (0.25-2.35)	4.42	5.8	4.6	A++
	7	7	12	2.15	2.15	3.70	8.00 (2.0-9.2)	1.82 (0.25-2.35)	4.40	6.0	4.6	A++
	7	7	14	2.00	2.00	4.00	8.00 (2.0-9.2)	1.82 (0.25-2.35)	4.40	6.0	4.6	A++
	7	7	18	1.75	1.75	4.50	8.00 (2.0-9.2)	1.82 (0.25-2.35)	4.40	6.0	4.6	A++
	7	9	9	2.24	2.88	2.88	8.00 (2.0-9.2)	1.82 (0.25-2.35)	4.40	6.0	4.6	A++
	7	9	12	2.00	2.57	3.43	8.00 (2.0-9.2)	1.82 (0.25-2.35)	4.40	6.0	4.6	A++
	7	9	14	1.87	2.40	3.73	8.00 (2.0-9.2)	1.82 (0.25-2.35)	4.40	6.0	4.6	A++
	7	9	18	1.65	2.12	4.23	8.00 (2.0-9.2)	1.82 (0.25-2.35)	4.40	6.0	4.6	A++
	7	12	12	1.80	3.10	3.10	8.00 (2.0-9.2)	1.82 (0.25-2.35)	4.40	6.0	4.6	A++
	7	12	14	1.70	2.91	3.39	8.00 (2.0-9.2)	1.82 (0.25-2.35)	4.40	6.0	4.6	A++
	7	14	14	1.60	3.20	3.20	8.00 (2.0-9.2)	1.82 (0.25-2.35)	4.40	6.0	4.6	A++
	9	9	[9]	2.67	2.67	2.67	8.00 (2.0-9.2)	1.82 (0.25-2.35)	4.40	6.0	4.6	A++
	9	9	12	2.40	2.40	3.20	8.00 (2.0-9.2)	1.82 (0.25-2.35)	4.40	6.0	4.6	A++
	9	9	14	2.25	2.25	3.50	8.00 (2.0-9.2)	1.82 (0.25-2.35)	4.40	6.0	4.6	A++
	9	9	18	2.00	2.00	4.00	8.00 (2.0-9.2)	1.82 (0.25-2.35)	4.40	6.0	4.6	A++
	9	12	12	2.18	2.91	2.91	8.00 (2.0-9.2)	1.82 (0.25-2.35)	4.40	6.0	4.6	A++
	9	12	14	2.06	2.74	3.20	8.00 (2.0-9.2)	1.82 (0.25-2.35)	4.40	6.0	4.6	A++
	12	12	12	2.67	2.67	2.67	8.00 (2.0-9.2)	1.82 (0.25-2.35)	4.40	6.0	4.6	A++

Notes: •7: 7000 Btu/h/9: 9000 Btu/h/12: 12000 Btu/h/14: 14000 Btu/h/18: 18000 Btu/h models
•The above specifications apply when connected with a wall-mounted unit.
•2 or more indoor units should be connected.
•Heating capacity is determined based on 20°CDB (indoor temperature) and 7°CDB/6°CWB (outdoor temperature).
•Pipe Length: 5 m, Height difference: 0 m (Outdoor unit to Indoor unit)
•Total capacity of indoor units connected must be between 4.0 kW and 10.5 kW.

4-unit Multi-split Combination Table–Cooling/Heating

4-unit Multi-split cooling

AOYG30KBTA4	Combination of Indoor Units				Cooling Operation									
					Cooling Capacity					Input Power (Min. - Max.)	EER	Seasonal Data		
					Unit 1	Unit 2	Unit 3	Unit 4	Total Capacity (Min. - Max.)			Pdesign	SEER	Energy efficiency
					kW	kW	kW	kW	kW	kW		kW		
2-unit connection	7	22	-	-	2.00	6.00	-	-	8.00 (2.4-10.1)	2.67 (0.45-3.25)	3.00	8.0	7.5	A++
	7	24	-	-	1.81	6.19	-	-	8.00 (2.4-10.1)	2.67 (0.45-3.25)	3.00	8.0	7.5	A++
	9	22	-	-	2.32	5.68	-	-	8.00 (2.4-10.1)	2.67 (0.45-3.25)	3.00	8.0	7.5	A++
	9	24	-	-	2.18	5.82	-	-	8.00 (2.4-10.1)	2.67 (0.45-3.25)	3.00	8.0	7.5	A++
	12	18	-	-	3.20	4.80	-	-	8.00 (2.4-10.1)	2.67 (0.45-3.25)	3.00	8.0	7.5	A++
	12	22	-	-	2.82	5.18	-	-	8.00 (2.4-10.1)	2.67 (0.45-3.25)	3.00	8.0	7.5	A++
	12	24	-	-	2.67	5.33	-	-	8.00 (2.4-10.1)	2.67 (0.45-3.25)	3.00	8.0	7.5	A++
	14	18	-	-	3.50	4.50	-	-	8.00 (2.4-10.1)	2.67 (0.45-3.25)	3.00	8.0	7.5	A++
	14	22	-	-	3.11	4.89	-	-	8.00 (2.4-10.1)	2.67 (0.45-3.25)	3.00	8.0	7.5	A++
	14	24	-	-	2.95	5.05	-	-	8.00 (2.4-10.1)	2.67 (0.45-3.25)	3.00	8.0	7.5	A++
	18	18	-	-	4.00	4.00	-	-	8.00 (2.4-10.1)	2.67 (0.45-3.25)	3.00	8.0	7.5	A++
	18	22	-	-	3.60	4.40	-	-	8.00 (2.4-10.1)	2.67 (0.45-3.25)	3.00	8.0	7.5	A++
	18	24	-	-	3.43	4.57	-	-	8.00 (2.4-10.1)	2.67 (0.45-3.25)	3.00	8.0	7.5	A++
	22	22	-	-	4.00	4.00	-	-	8.00 (2.4-10.1)	2.67 (0.45-3.25)	3.00	8.0	7.5	A++
	22	24	-	-	3.83	4.17	-	-	8.00 (2.4-10.1)	2.67 (0.45-3.25)	3.00	8.0	7.5	A++
	24	24	-	-	4.00	4.00	-	-	8.00 (2.4-10.1)	2.67 (0.45-3.25)	3.00	8.0	7.5	A++
3-unit connection	7	7	12	-	2.00	2.00	3.50	-	7.50 (2.4-9.3)	2.10 (0.45-2.84)	3.57	7.5	8.1	A++
	7	7	14	-	2.00	2.00	4.00	-	8.00 (2.4-10.1)	2.32 (0.45-3.25)	3.45	8.0	8.0	A++
	7	7	18	-	1.75	1.75	4.50	-	8.00 (2.4-10.1)	2.32 (0.45-3.25)	3.45	8.0	8.0	A++
	7	7	22	-	1.56	1.56	4.88	-	8.00 (2.4-10.1)	2.32 (0.45-3.25)	3.45	8.0	8.0	A++
	7	7	24	-	1.47	1.47	5.06	-	8.00 (2.4-10.1)	2.32 (0.45-3.25)	3.45	8.0	8.0	A++
	7	9	9	-	2.00	2.50	2.50	-	7.00 (2.4-8.9)	1.90 (0.45-2.65)	3.69	7.0	8.2	A++
	7	9	12	-	2.00	2.50	3.50	-	8.00 (2.4-10.1)	2.32 (0.45-3.25)	3.45	8.0	8.0	A++
	7	9	14	-	1.87	2.40	3.73	-	8.00 (2.4-10.1)	2.32 (0.45-3.25)	3.45	8.0	8.0	A++
	7	9	18	-	1.64	2.12	4.24	-	8.00 (2.4-10.1)	2.32 (0.45-3.25)	3.45	8.0	8.0	A++
	7	9	22	-	1.47	1.89	4.64	-	8.00 (2.4-10.1)	2.32 (0.45-3.25)	3.45	8.0	8.0	A++
	7	9	24	-	1.40	1.80	4.80	-	8.00 (2.4-10.1)	2.32 (0.45-3.25)	3.45	8.0	8.0	A++
	7	12	12	-	1.80	3.10	3.10	-	8.00 (2.4-10.1)	2.32 (0.45-3.25)	3.45	8.0	8.0	A++
	7	12	14	-	1.70	2.91	3.39	-	8.00 (2.4-10.1)	2.32 (0.45-3.25)	3.45	8.0	8.0	A++
	7	12	18	-	1.51	2.59	3.90	-	8.00 (2.4-10.1)	2.32 (0.45-3.25)	3.45	8.0	8.0	A++
	7	12	22	-	1.37	2.34	4.29	-	8.00 (2.4-10.1)	2.32 (0.45-3.25)	3.45	8.0	8.0	A++
	7	12	24	-	1.30	2.23	4.47	-	8.00 (2.4-10.1)	2.32 (0.45-3.25)	3.45	8.0	8.0	A++
	7	14	14	-	1.60	3.20	3.20	-	8.00 (2.4-10.1)	2.32 (0.45-3.25)	3.45	8.0	8.0	A++
	7	14	18	-	1.44	2.87	3.69	-	8.00 (2.4-10.1)	2.32 (0.45-3.25)	3.45	8.0	8.0	A++
	7	14	22	-	1.30	2.60	4.10	-	8.00 (2.4-10.1)	2.32 (0.45-3.25)	3.45	8.0	8.0	A++
	7	14	24	-	1.24	2.49	4.27	-	8.00 (2.4-10.1)	2.32 (0.45-3.25)	3.45	8.0	8.0	A++
	7	18	18	-	1.30	3.35	3.35	-	8.00 (2.4-10.1)	2.32 (0.45-3.25)	3.45	8.0	8.0	A++
	7	18	22	-	1.19	3.06	3.75	-	8.00 (2.4-10.1)	2.32 (0.45-3.25)	3.45	8.0	8.0	A++
	7	18	24	-	1.14	2.94	3.92	-	8.00 (2.4-10.1)	2.32 (0.45-3.25)	3.45	8.0	8.0	A++
	9	9	9	-	2.50	2.50	2.50	-	7.50 (2.4-9.6)	2.10 (0.45-3.01)	3.57	7.5	8.1	A++
	9	9	12	-	2.40	2.40	3.20	-	8.00 (2.4-10.1)	2.32 (0.45-3.25)	3.45	8.0	8.0	A++
	9	9	14	-	2.25	2.25	3.50	-	8.00 (2.4-10.1)	2.32 (0.45-3.25)	3.45	8.0	8.0	A++
	9	9	18	-	2.00	2.00	4.00	-	8.00 (2.4-10.1)	2.32 (0.45-3.25)	3.45	8.0	8.0	A++
	9	9	22	-	1.80	1.80	4.40	-	8.00 (2.4-10.1)	2.32 (0.45-3.25)	3.45	8.0	8.0	A++
	9	9	24	-	1.71	1.71	4.58	-	8.00 (2.4-10.1)	2.32 (0.45-3.25)	3.45	8.0	8.0	A++
	9	12	12	-	2.18	2.91	2.91	-	8.00 (2.4-10.1)	2.32 (0.45-3.25)	3.45	8.0	8.0	A++
	9	12	14	-	2.06	2.74	3.20	-	8.00 (2.4-10.1)	2.32 (0.45-3.25)	3.45	8.0	8.0	A++
	9	12	18	-	1.85	2.46	3.69	-	8.00 (2.4-10.1)	2.32 (0.45-3.25)	3.45	8.0	8.0	A++
	9	12	22	-	1.67	2.23	4.10	-	8.00 (2.4-10.1)	2.32 (0.45-3.25)	3.45	8.0	8.0	A++
	9	12	24	-	1.60	2.13	4.27	-	8.00 (2.4-10.1)	2.32 (0.45-3.25)	3.45	8.0	8.0	A++
	9	14	14	-	1.94	3.03	3.03	-	8.00 (2.4-10.1)	2.32 (0.45-3.25)	3.45	8.0	8.0	A++
	9	14	18	-	1.76	2.73	3.51	-	8.00 (2.4-10.1)	2.32 (0.45-3.25)	3.45	8.0	8.0	A++
	9	14	22	-	1.60	2.49	3.91	-	8.00 (2.4-10.1)	2.32 (0.45-3.25)	3.45	8.0	8.0	A++
	9	14	24	-	1.53	2.38	4.09	-	8.00 (2.4-10.1)	2.32 (0.45-3.25)	3.45	8.0	8.0	A++
	9	18	18	-	1.60	3.20	3.20	-	8.00(2.4-10.1)	2.32(0.45-3.25)	3.45	8.0	8.0	A++
	12	12	12	-	2.67	2.67	2.67	-	8.00 (2.4-10.1)	2.32 (0.45-3.25)	3.45	8.0	8.0	A++
	12	12	14	-	2.53	2.53	2.94	-	8.00 (2.4-10.1)	2.32 (0.45-3.25)	3.45	8.0	8.0	A++
	12	12	18	-	2.29	2.29	3.42	-	8.00 (2.4-10.1)	2.32 (0.45-3.25)	3.45	8.0	8.0	A++
	12	12	22	-	2.09	2.09	3.82	-	8.00 (2.4-10.1)	2.32 (0.45-3.25)	3.45	8.0	8.0	A++
	12	12	24	-	2.00	2.00	4.00	-	8.00 (2.4-10.1)	2.32 (0.45-3.25)	3.45	8.0	8.0	A++
	12	14	14	-	2.40	2.80	2.80	-	8.00 (2.4-10.1)	2.32 (0.45-3.25)	3.45	8.0	8.0	A++
	12	14	18	-	2.18	2.55	3.27	-	8.00 (2.4-10.1)	2.32 (0.45-3.25)	3.45	8.0	8.0	A++
	12	18	18	-	2.00	3.00	3.00	-	8.00 (2.4-10.1)	2.32 (0.45-3.25)	3.45	8.0	8.0	A++
	14	14	14	-	2.67	2.67	2.67	-	8.00 (2.4-10.1)	2.32 (0.45-3.25)	3.45	8.0	8.0	A++
	14	14	18	-	2.43	2.43	3.14	-	8.00 (2.4-10.1)	2.32 (0.45-3.25)	3.45	8.0	8.0	A++
4-unit connection	7	7	7	7	2.00	2.00	2.00	2.00	8.00 (2.4-10.1)	2.05 (0.45-3.25)	3.90	8.0	8.5	A+++
	7	7	7	9	1.87	1.87	1.87	2.39	8.00 (2.4-10.1)	2.05 (0.45-3.25)	3.90	8.0	8.5	A+++
	7	7	7	12	1.70	1.70	1.70	2.90	8.00 (2.4-10.1)	2.05 (0.45-3.25)	3.90	8.0	8.5	A+++
	7	7	7	14	1.60	1.60	1.60	3.20	8.00 (2.4-10.1)	2.05 (0.45-3.25)	3.90	8.0	8.5	A+++
	7	7	7	18	1.44	1.44	1.44	3.68	8.00 (2.4-10.1)	2.05 (0.45-3.25)	3.90	8.0	8.5	A+++
	7	7	9	9	1.75	1.75	2.25	2.25	8.00 (2.4-10.1)	2.05 (0.45-3.25)	3.90	8.0	8.5	A+++
	7	7	9	12	1.60	1.60	2.06	2.74	8.00 (2.4-10.1)	2.05 (0.45-3.25)	3.90	8.0	8.5	A+++
	7	7	9	14	1.51	1.51	1.95	3.03	8.00 (2.4-10.1)	2.05 (0.45-3.25)	3.90	8.0	8.5	A+++
	7	7	9	18	1.37	1.37	1.76	3.50	8.00 (2.4-10.1)	2.05 (0.45-3.25)	3.90	8.0	8.5	A+++
	7	7	12	12	1.47	1.47	2.53	2.53	8.00 (2.4-10.1)	2.05 (0.45-3.25)	3.90	8.0	8.5	A+++
	7	7	12	14	1.40	1.40	2.40	2.80	8.00 (2.4-10.1)	2.05 (0.45-3.25)	3.90	8.0	8.5	A+++
	7	7	12	18	1.27	1.27	2.18	3.28	8.00 (2.4-10.1)	2.05 (0.45-3.25)	3.90	8.0	8.5	A+++
	7	7	14	14	1.33	1.33	2.67	2.67	8.00 (2.4-10.1)	2.05 (0.45-3.25)	3.90	8.0	8.5	A+++
	7	7	14	18	1.22	1.22	2.43	3.13	8.00 (2.4-10.1)	2.05 (0.45-3.25)	3.90	8.0	8.5	A+++
	7	9	9	9	1.64	2.12	2.12	2.12	8.00 (2.4-10.1)	2.05 (0.45-3.25)	3.90	8.0	8.5	A+++
	7	9	9	12	1.51	1.95	1.95	2.59	8.00 (2.4-10.1)	2.05 (0.45-3.25)	3.90	8.0	8.5	A+++
	7	9	9	14	1.43	1.85	1.85	2.87	8.00 (2.4-10.1)	2.05 (0.45-3.25)	3.90	8.0	8.5	A+++
	7	9	9	18	1.30	1.67	1.67	3.36	8.00 (2.4-10.1)	2.05 (0.45-3.25)	3.90	8.0	8.5	A+++
	7	9	12	12	1.40	1.80	2.40	2.40	8.00 (2.4-10.1)	2.05 (0.45-3.25)	3.90	8.0	8.5	A+++
	7	9	12	14	1.33	1.71	2.29	2.67	8.00 (2.4-10.1)	2.05 (0.45-3.25)	3.90	8.0	8.5	A+++
	7	9	12	18	1.21	1.57	2.09	3.13	8.00 (2.4-10.1)	2.05 (0.45-3.25)	3.90	8.0	8.5	A+++
	7	9	14	14	1.26	1.64	2.55	2.55	8.00 (2.4-10.1)	2.05 (0.45-3.25)	3.90	8.0	8.5	A+++
	7	9	14	18	1.17	1.50	2.33	3.00	8.00 (2.4-10.1)	2.05 (0.45-3.25)	3.90	8.0	8.5	A+++
	7	12	12	12	1.31	2.23	2.23	2.23	8.00 (2.4-10.1)	2.05 (0.45-3.25)	3.90	8.0	8.5	A+++
	7	12	12	14	1.24	2.13	2.13	2.50	8.00 (2.4-10.1)	2.05 (0.45-3.25)	3.90	8.0	8.5	A+++
	7	12	12	18	1.14	1.96	1.96	2.94	8.00 (2.4-10.1)	2.05 (0.45-3.25)	3.90	8.0	8.5	A+++
	7	12	14	14	1.19	2.05	2.38	2.38	8.00 (2.4-10.1)	2.05 (0.45-3.25)	3.90	8.0	8.5	A+++
	9	9	9	9	2.00	2.00	2.00	2.00	8.00 (2.4-10.1)	2.05 (0.45-3.25)	3.90	8.0	8.5	A+++
	9	9	9	12	1.85	1.85	1.85	2.45	8.00 (2.4-10.1)	2.05 (0.45-3.25)	3.90	8.0	8.5	A+++
	9	9	9	14	1.76	1.76	1.76	2.72	8.00 (2.4-10.1)	2.05 (0.45-3.25)	3.90	8.0	8.5	A+++
	9	9	9	18	1.60	1.60	1.60	3.20	8.00 (2.4-10.1)	2.05 (0.45-3.25)	3.90	8.0	8.5	A+++
	9	9	12	12	1.71	1.71	2.29	2.29	8.00 (2.4-10.1)	2.05 (0.45-3.25)	3.90	8.0	8.5	A+++
	9	9	12	14	1.64	1.64	2.18	2.54	8.00 (2.4-10.1)	2.05 (0.45-3.25)	3.90	8.0	8.5	A+++
	9	9	12	18	1.50	1.50	2.00	3.00	8.00 (2.4-10.1)	2.05 (0.45-3.25)	3.90	8.0	8.5	A+++
	9	9	14	14	1.57	1.57	2.43	2.43	8.00 (2.4-10.1)	2.05 (0.45-3.25)	3.90	8.0	8.5	A+++
	9	12	12	12	1.61	2.13	2.13	2.13	8.00 (2.4-10.1)	2.05 (0.45-3.25)	3.90	8.0	8.5	A+++
	9	12	12	14	1.53	2.04	2.04	2.39	8.00 (2.4-10.1)	2.05 (0.45-3.25)	3.90	8.0	8.5	A+++
	9	12	14	14	1.46	1.96	2.29	2.29	8.00 (2.4-10.1)	2.05 (0.45-3.25)	3.90	8.0	8.5	A+++
	12	12	12	12	2.00	2.00	2.00	2.00	8.00 (2.4-10.1)	2.05 (0.45-3.25)	3.90	8.0	8.5	A+++

Notes: •7: 7000 Btu/h/9: 9000 Btu/h/12: 12000 Btu/h/14: 14000 Btu/h/18: 18000 Btu/h/22: 22000 Btu/h/24: 24000 Btu/h models
•The above specifications apply when connected with a wall-mounted unit.
•2 or more indoor units should be connected.
•Cooling capacity is determined based on 27°CDB/19°CWB (indoor temperature) and 35°CDB (outdoor temperature).
•Pipe Length: 5 m, Height difference: 0 m (Outdoor unit to Indoor unit)
•Total capacity of indoor units connected must be between 7.5 kW and 14.0 kW.

4-unit Multi-split heating

AOYG30KBTA4	Combination of Indoor Units				Heating Operation									
					Heating Capacity					Input Power (Min. - Max.)	COP	Seasonal Data		
					Unit 1	Unit 2	Unit 3	Unit 4	Total Capacity (Min. - Max.)			Pdesign	SCOP	Energy efficiency
					kW	kW	kW	kW	kW	kW		kW		
2-unit connection	7	22	-	-	2.40	7.20	-	-	9.60 (3.0-11.2)	2.47 (0.30-2.95)	3.89	6.5	4.1	A+
	7	24	-	-	2.17	7.43	-	-	9.60 (3.0-11.2)	2.47 (0.30-2.95)	3.89	6.5	4.1	A+
	9	22	-	-	2.79	6.81	-	-	9.60 (3.0-11.2)	2.47 (0.30-2.95)	3.89	6.5	4.1	A+
	9	24	-	-	2.62	6.98	-	-	9.60 (3.0-11.2)	2.47 (0.30-2.95)	3.89	6.5	4.1	A+
	12	18	-	-	3.84	5.76	-	-	9.60 (3.0-11.2)	2.47 (0.30-2.95)	3.89	6.5	4.1	A+
	12	22	-	-	3.39	6.21	-	-	9.60 (3.0-11.2)	2.47 (0.30-2.95)	3.89	6.5	4.1	A+
	12	24	-	-	3.20	6.40	-	-	9.60 (3.0-11.2)	2.47 (0.30-2.95)	3.89	6.5	4.1	A+
	14	18	-	-	4.20	5.40	-	-	9.60 (3.0-11.2)	2.47 (0.30-2.95)	3.89	6.5	4.1	A+
	14	22	-	-	3.73	5.87	-	-	9.60 (3.0-11.2)	2.47 (0.30-2.95)	3.89	6.5	4.1	A+
	14	24	-	-	3.54	6.06	-	-	9.60 (3.0-11.2)	2.47 (0.30-2.95)	3.89	6.5	4.1	A+
	18	18	-	-	4.80	4.80	-	-	9.60 (3.0-11.2)	2.47 (0.30-2.95)	3.89	6.5	4.1	A+
	18	22	-	-	4.32	5.28	-	-	9.60 (3.0-11.2)	2.47 (0.30-2.95)	3.89	6.5	4.1	A+
	18	24	-	-	4.11	5.49	-	-	9.60 (3.0-11.2)	2.47 (0.30-2.95)	3.89	6.5	4.1	A+
	22	22	-	-	4.80	4.80	-	-	9.60 (3.0-11.2)	2.47 (0.30-2.95)	3.89	6.5	4.1	A+
	22	24	-	-	4.59	5.01	-	-	9.60 (3.0-11.2)	2.47 (0.30-2.95)	3.89	6.5	4.1	A+
	24	24	-	-	4.80	4.80	-	-	9.60 (3.0-11.2)	2.47 (0.30-2.95)	3.89	6.5	4.1	A+
3-unit connection	7	7	12	-	2.40	2.40	4.20	-	9.00 (3.0-10.4)	2.11 (0.30-2.60)	4.27	6.0	4.4	A+
	7	7	14	-	2.40	2.40	4.80	-	9.60 (3.0-11.2)	2.27 (0.30-2.95)	4.22	6.5	4.3	A+
	7	7	18	-	2.10	2.10	5.40	-	9.60 (3.0-11.2)	2.27 (0.30-2.95)	4.22	6.5	4.3	A+
	7	7	22	-	1.87	1.87	5.86	-	9.60 (3.0-11.2)	2.27 (0.30-2.95)	4.22	6.5	4.3	A+
	7	7	24	-	1.77	1.77	6.06	-	9.60 (3.0-11.2)	2.27 (0.30-2.95)	4.22	6.5	4.3	A+
	7	9	9	-	2.40	3.00	3.00	-	8.40 (3.0-10.0)	1.94 (0.30-2.45)	4.32	6.0	4.4	A+
	7	9	12	-	2.40	3.00	4.20	-	9.60 (3.0-11.2)	2.27 (0.30-2.95)	4.22	6.5	4.3	A+
	7	9	14	-	2.24	2.88	4.48	-	9.60 (3.0-11.2)	2.27 (0.30-2.95)	4.22	6.5	4.3	A+
	7	9	18	-	1.98	2.54	5.08	-	9.60 (3.0-11.2)	2.27 (0.30-2.95)	4.22	6.5	4.3	A+
	7	9	22	-	1.77	2.27	5.56	-	9.60 (3.0-11.2)	2.27 (0.30-2.95)	4.22	6.5	4.3	A+
	7	9	24	-	1.68	2.16	5.76	-	9.60 (3.0-11.2)	2.27 (0.30-2.95)	4.22	6.5	4.3	A+
	7	12	12	-	2.16	3.72	3.72	-	9.60 (3.0-11.2)	2.27 (0.30-2.95)	4.22	6.5	4.3	A+
	7	12	14	-	2.04	3.49	4.07	-	9.60 (3.0-11.2)	2.27 (0.30-2.95)	4.22	6.5	4.3	A+
	7	12	18	-	1.82	3.11	4.67	-	9.60 (3.0-11.2)	2.27 (0.30-2.95)	4.22	6.5	4.3	A+
	7	12	22	-	1.64	2.81	5.15	-	9.60 (3.0-11.2)	2.27 (0.30-2.95)	4.22	6.5	4.3	A+
	7	12	24	-	1.56	2.68	5.36	-	9.60 (3.0-11.2)	2.27 (0.30-2.95)	4.22	6.5	4.3	A+
	7	14	14	-	1.92	3.84	3.84	-	9.60 (3.0-11.2)	2.27 (0.30-2.95)	4.22	6.5	4.3	A+
	7	14	18	-	1.72	3.45	4.43	-	9.60 (3.0-11.2)	2.27 (0.30-2.95)	4.22	6.5	4.3	A+
	7	14	22	-	1.56	3.13	4.91	-	9.60 (3.0-11.2)	2.27 (0.30-2.95)	4.22	6.5	4.3	A+
	7	14	24	-	1.49	2.99	5.12	-	9.60 (3.0-11.2)	2.27 (0.30-2.95)	4.22	6.5	4.3	A+
	7	18	18	-	1.56	4.02	4.02	-	9.60 (3.0-11.2)	2.27 (0.30-2.95)	4.22	6.5	4.3	A+
	7	18	22	-	1.43	3.68	4.49	-	9.60 (3.0-11.2)	2.27 (0.30-2.95)	4.22	6.5	4.3	A+
	7	18	24	-	1.37	3.53	4.70	-	9.60 (3.0-11.2)	2.27 (0.30-2.95)	4.22	6.5	4.3	A+
	9	9	9	-	3.00	3.00	3.00	-	9.00 (3.0-10.8)	2.11 (0.30-2.76)	4.27	6.0	4.4	A+
	9	9	12	-	2.88	2.88	3.84	-	9.60 (3.0-11.2)	2.27 (0.30-2.95)	4.22	6.5	4.3	A+
	9	9	14	-	2.70	2.70	4.20	-	9.60 (3.0-11.2)	2.27 (0.30-2.95)	4.22	6.5	4.3	A+
	9	9	18	-	2.40	2.40	4.80	-	9.60 (3.0-11.2)	2.27 (0.30-2.95)	4.22	6.5	4.3	A+
	9	9	22	-	2.16	2.16	5.28	-	9.60 (3.0-11.2)	2.27 (0.30-2.95)	4.22	6.5	4.3	A+
	9	9	24	-	2.06	2.06	5.48	-	9.60 (3.0-11.2)	2.27 (0.30-2.95)	4.22	6.5	4.3	A+
	9	12	12	-	2.62	3.49	3.49	-	9.60 (3.0-11.2)	2.27 (0.30-2.95)	4.22	6.5	4.3	A+
	9	12	14	-	2.47	3.29	3.84	-	9.60 (3.0-11.2)	2.27 (0.30-2.95)	4.22	6.5	4.3	A+
	9	12	18	-	2.22	2.95	4.43	-	9.60 (3.0-11.2)	2.27 (0.30-2.95)	4.22	6.5	4.3	A+
	9	12	22	-	2.01	2.68	4.91	-	9.60 (3.0-11.2)	2.27 (0.30-2.95)	4.22	6.5	4.3	A+
	9	12	24	-	1.92	2.56	5.12	-	9.60 (3.0-11.2)	2.27 (0.30-2.95)	4.22	6.5	4.3	A+
	9	14	14	-	2.34	3.63	3.63	-	9.60 (3.0-11.2)	2.27 (0.30-2.95)	4.22	6.5	4.3	A+
	9	14	18	-	2.11	3.28	4.21	-	9.60 (3.0-11.2)	2.27 (0.30-2.95)	4.22	6.5	4.3	A+
	9	14	22	-	1.92	2.99	4.69	-	9.60 (3.0-11.2)	2.27 (0.30-2.95)	4.22	6.5	4.3	A+
	9	14	24	-	1.84	2.86	4.90	-	9.60 (3.0-11.2)	2.27 (0.30-2.95)	4.22	6.5	4.3	A+
	9	18	18	-	1.92	3.84	3.84	-	9.60(3.0-11.2)	2.27(0.30-2.95)	4.22	6.5	4.3	A+
	12	12	12	-	3.20	3.20	3.20	-	9.60 (3.0-11.2)	2.27 (0.30-2.95)	4.22	6.5	4.3	A+
	12	12	14	-	3.03	3.03	3.54	-	9.60 (3.0-11.2)	2.27 (0.30-2.95)	4.22	6.5	4.3	A+
	12	12	18	-	2.74	2.74	4.12	-	9.60 (3.0-11.2)	2.27 (0.30-2.95)	4.22	6.5	4.3	A+
	12	12	22	-	2.50	2.50	4.60	-	9.60 (3.0-11.2)	2.27 (0.30-2.95)	4.22	6.5	4.3	A+
	12	12	24	-	2.40	2.40	4.80	-	9.60 (3.0-11.2)	2.27 (0.30-2.95)	4.22	6.5	4.3	A+
	12	14	14	-	2.88	3.36	3.36	-	9.60 (3.0-11.2)	2.27 (0.30-2.95)	4.22	6.5	4.3	A+
	12	14	18	-	2.62	3.05	3.93	-	9.60 (3.0-11.2)	2.27 (0.30-2.95)	4.22	6.5	4.3	A+
	12	18	18	-	2.40	3.60	3.60	-	9.60 (3.0-11.2)	2.27 (0.30-2.95)	4.22	6.5	4.3	A+
	14	14	14	-	3.20	3.20	3.20	-	9.60 (3.0-11.2)	2.27 (0.30-2.95)	4.22	6.5	4.3	A+
	14	14	18	-	2.92	2.92	3.76	-	9.60 (3.0-11.2)	2.27 (0.30-2.95)	4.22	6.5	4.3	A+
4-unit connection	7	7	7	7	2.

5-unit Multi-split Combination Table-Cooling

5-unit Multi-split cooling

AOYG36KBTA5	Combination of Indoor Units					Cooling Operation									
						Cooling Capacity						Input Power (Min. - Max.)	EER	Seasonal Data	
						Unit 1	Unit 2	Unit 3	Unit 4	Unit 5	Total Capacity (Min. - Max.)			Pdesign	SEER	Energy efficiency
						kW	kW	kW	kW	kW	kW	kW		kW		
2-unit connection	7	24	-	-	-	2.00	7.00	-	-	-	9.00 (3.0-11.0)	2.91 (0.30-3.45)	3.09	9.0	7.9	A++
	9	22	-	-	-	2.50	6.00	-	-	-	8.50 (3.0-11.0)	2.67 (0.30-3.45)	3.18	8.5	7.9	A++
	9	24	-	-	-	2.50	7.00	-	-	-	9.50 (3.0-11.0)	3.17 (0.30-3.45)	3.00	9.5	7.8	A++
	12	22	-	-	-	3.50	6.00	-	-	-	9.50 (3.0-11.0)	3.17 (0.30-3.45)	3.00	9.5	7.8	A++
	12	24	-	-	-	3.17	6.33	-	-	-	9.50 (3.0-11.0)	3.17 (0.30-3.45)	3.00	9.5	7.8	A++
	14	22	-	-	-	3.69	5.81	-	-	-	9.50 (3.0-11.0)	3.17 (0.30-3.45)	3.00	9.5	7.8	A++
	14	24	-	-	-	3.50	6.00	-	-	-	9.50 (3.0-11.0)	3.17 (0.30-3.45)	3.00	9.5	7.8	A++
	18	18	-	-	-	4.75	4.75	-	-	-	9.50 (3.0-11.0)	3.17 (0.30-3.45)	3.00	9.5	7.8	A++
	18	22	-	-	-	4.27	5.23	-	-	-	9.50 (3.0-11.0)	3.17 (0.30-3.45)	3.00	9.5	7.8	A++
	18	24	-	-	-	4.07	5.43	-	-	-	9.50 (3.0-11.0)	3.17 (0.30-3.45)	3.00	9.5	7.8	A++
	22	22	-	-	-	4.75	4.75	-	-	-	9.50 (3.0-11.0)	3.17 (0.30-3.45)	3.00	9.5	7.8	A++
	22	24	-	-	-	4.54	4.96	-	-	-	9.50 (3.0-11.0)	3.17 (0.30-3.45)	3.00	9.5	7.8	A++
	24	24	-	-	-	4.75	4.75	-	-	-	9.50 (3.0-11.0)	3.17 (0.30-3.45)	3.00	9.5	7.8	A++
3-unit connection	7	7	14	-	-	2.00	2.00	4.00	-	-	8.00 (3.0-10.0)	2.26 (0.30-2.88)	3.54	8.0	8.2	A++
	7	7	18	-	-	2.00	2.00	5.00	-	-	9.00 (3.0-11.0)	2.68 (0.30-3.45)	3.36	9.0	8.1	A++
	7	7	22	-	-	1.85	1.85	5.80	-	-	9.50 (3.0-11.0)	2.91 (0.30-3.45)	3.27	9.5	8.0	A++
	7	7	24	-	-	1.75	1.75	6.00	-	-	9.50 (3.0-11.0)	2.91 (0.30-3.45)	3.27	9.5	8.0	A++
	7	9	12	-	-	2.00	2.50	3.50	-	-	8.00 (3.0-10.0)	2.26 (0.30-2.88)	3.54	8.0	8.2	A++
	7	9	14	-	-	2.00	2.50	4.00	-	-	8.50 (3.0-10.7)	2.46 (0.30-3.27)	3.45	8.5	8.1	A++
	7	9	18	-	-	2.00	2.50	5.00	-	-	9.50 (3.0-11.0)	2.91 (0.30-3.45)	3.27	9.5	8.0	A++
	7	9	22	-	-	1.75	2.25	5.50	-	-	9.50 (3.0-11.0)	2.91 (0.30-3.45)	3.27	9.5	8.0	A++
	7	9	24	-	-	1.66	2.14	5.70	-	-	9.50 (3.0-11.0)	2.91 (0.30-3.45)	3.27	9.5	8.0	A++
	7	12	12	-	-	2.00	3.50	3.50	-	-	9.00 (3.0-11.0)	2.68 (0.30-3.45)	3.36	9.0	8.1	A++
	7	12	14	-	-	2.00	3.50	4.00	-	-	9.50 (3.0-11.0)	2.91 (0.30-3.45)	3.27	9.5	8.0	A++
	7	12	18	-	-	1.80	3.08	4.62	-	-	9.50 (3.0-11.0)	2.91 (0.30-3.45)	3.27	9.5	8.0	A++
	7	12	22	-	-	1.62	2.78	5.10	-	-	9.50 (3.0-11.0)	2.91 (0.30-3.45)	3.27	9.5	8.0	A++
	7	12	24	-	-	1.55	2.65	5.30	-	-	9.50 (3.0-11.0)	2.91 (0.30-3.45)	3.27	9.5	8.0	A++
	7	14	14	-	-	1.90	3.80	3.80	-	-	9.50 (3.0-11.0)	2.91 (0.30-3.45)	3.27	9.5	8.0	A++
	7	14	18	-	-	1.71	3.41	4.38	-	-	9.50 (3.0-11.0)	2.91 (0.30-3.45)	3.27	9.5	8.0	A++
	7	14	22	-	-	1.55	3.09	4.86	-	-	9.50 (3.0-11.0)	2.91 (0.30-3.45)	3.27	9.5	8.0	A++
	7	14	24	-	-	1.47	2.96	5.07	-	-	9.50 (3.0-11.0)	2.91 (0.30-3.45)	3.27	9.5	8.0	A++
	7	18	18	-	-	1.54	3.98	3.98	-	-	9.50 (3.0-11.0)	2.91 (0.30-3.45)	3.27	9.5	8.0	A++
	7	18	22	-	-	1.41	3.64	4.45	-	-	9.50 (3.0-11.0)	2.91 (0.30-3.45)	3.27	9.5	8.0	A++
	7	18	24	-	-	1.36	3.49	4.65	-	-	9.50 (3.0-11.0)	2.91 (0.30-3.45)	3.27	9.5	8.0	A++
	9	9	9	-	-	2.50	2.50	2.50	-	-	7.50 (3.0-9.6)	2.07 (0.30-2.70)	3.63	7.5	8.2	A++
	9	9	12	-	-	2.50	2.50	3.50	-	-	8.50 (3.0-10.7)	2.46 (0.30-3.27)	3.45	8.5	8.1	A++
	9	9	14	-	-	2.50	2.50	4.00	-	-	9.00 (3.0-11.0)	2.68 (0.30-3.45)	3.36	9.0	8.1	A++
	9	9	18	-	-	2.38	2.38	4.74	-	-	9.50 (3.0-11.0)	2.91 (0.30-3.45)	3.27	9.5	8.0	A++
	9	9	22	-	-	2.14	2.14	5.22	-	-	9.50 (3.0-11.0)	2.91 (0.30-3.45)	3.27	9.5	8.0	A++
	9	9	24	-	-	2.04	2.04	5.42	-	-	9.50 (3.0-11.0)	2.91 (0.30-3.45)	3.27	9.5	8.0	A++
	9	12	12	-	-	2.50	3.50	3.50	-	-	9.50 (3.0-11.0)	2.91 (0.30-3.45)	3.27	9.5	8.0	A++
	9	12	14	-	-	2.44	3.26	3.80	-	-	9.50 (3.0-11.0)	2.91 (0.30-3.45)	3.27	9.5	8.0	A++
	9	12	18	-	-	2.19	2.92	4.39	-	-	9.50 (3.0-11.0)	2.91 (0.30-3.45)	3.27	9.5	8.0	A++
	9	12	22	-	-	1.99	2.65	4.86	-	-	9.50 (3.0-11.0)	2.91 (0.30-3.45)	3.27	9.5	8.0	A++
	9	12	24	-	-	1.90	2.53	5.07	-	-	9.50 (3.0-11.0)	2.91 (0.30-3.45)	3.27	9.5	8.0	A++
	9	14	14	-	-	2.32	3.59	3.59	-	-	9.50 (3.0-11.0)	2.91 (0.30-3.45)	3.27	9.5	8.0	A++
	9	14	18	-	-	2.09	3.24	4.17	-	-	9.50 (3.0-11.0)	2.91 (0.30-3.45)	3.27	9.5	8.0	A++
	9	14	22	-	-	1.90	2.96	4.64	-	-	9.50 (3.0-11.0)	2.91 (0.30-3.45)	3.27	9.5	8.0	A++
	9	14	24	-	-	1.82	2.83	4.85	-	-	9.50 (3.0-11.0)	2.91 (0.30-3.45)	3.27	9.5	8.0	A++
	9	18	18	-	-	1.90	3.80	3.80	-	-	9.50 (3.0-11.0)	2.91 (0.30-3.45)	3.27	9.5	8.0	A++
	9	18	22	-	-	1.74	3.49	4.27	-	-	9.50 (3.0-11.0)	2.91 (0.30-3.45)	3.27	9.5	8.0	A++
	9	18	24	-	-	1.68	3.35	4.47	-	-	9.50 (3.0-11.0)	2.91 (0.30-3.45)	3.27	9.5	8.0	A++
	12	12	12	-	-	3.17	3.17	3.17	-	-	9.50 (3.0-11.0)	2.91 (0.30-3.45)	3.27	9.5	8.0	A++
	12	12	14	-	-	3.00	3.00	3.50	-	-	9.50 (3.0-11.0)	2.91 (0.30-3.45)	3.27	9.5	8.0	A++
	12	12	18	-	-	2.71	2.71	4.08	-	-	9.50 (3.0-11.0)	2.91 (0.30-3.45)	3.27	9.5	8.0	A++
	12	12	22	-	-	2.48	2.48	4.54	-	-	9.50 (3.0-11.0)	2.91 (0.30-3.45)	3.27	9.5	8.0	A++
	12	12	24	-	-	2.38	2.38	4.74	-	-	9.50 (3.0-11.0)	2.91 (0.30-3.45)	3.27	9.5	8.0	A++
	12	14	14	-	-	2.84	3.33	3.33	-	-	9.50 (3.0-11.0)	2.91 (0.30-3.45)	3.27	9.5	8.0	A++
	12	14	18	-	-	2.59	3.02	3.89	-	-	9.50 (3.0-11.0)	2.91 (0.30-3.45)	3.27	9.5	8.0	A++
	12	14	22	-	-	2.38	2.77	4.35	-	-	9.50 (3.0-11.0)	2.91 (0.30-3.45)	3.27	9.5	8.0	A++
	12	14	24	-	-	2.28	2.66	4.56	-	-	9.50 (3.0-11.0)	2.91 (0.30-3.45)	3.27	9.5	8.0	A++
	12	18	18	-	-	2.38	3.56	3.56	-	-	9.50 (3.0-11.0)	2.91 (0.30-3.45)	3.27	9.5	8.0	A++
	12	18	22	-	-	2.19	3.29	4.02	-	-	9.50 (3.0-11.0)	2.91 (0.30-3.45)	3.27	9.5	8.0	A++
	12	18	24	-	-	2.11	3.17	4.22	-	-	9.50 (3.0-11.0)	2.91 (0.30-3.45)	3.27	9.5	8.0	A++
	14	14	14	-	-	3.17	3.17	3.17	-	-	9.50 (3.0-11.0)	2.91 (0.30-3.45)	3.27	9.5	8.0	A++
	14	14	18	-	-	2.89	2.89	3.72	-	-	9.50 (3.0-11.0)	2.91 (0.30-3.45)	3.27	9.5	8.0	A++
	14	14	22	-	-	2.66	2.66	4.18	-	-	9.50 (3.0-11.0)	2.91 (0.30-3.45)	3.27	9.5	8.0	A++
	14	14	24	-	-	2.56	2.56	4.38	-	-	9.50 (3.0-11.0)	2.91 (0.30-3.45)	3.27	9.5	8.0	A++
	14	18	18	-	-	2.66	3.42	3.42	-	-	9.50 (3.0-11.0)	2.91 (0.30-3.45)	3.27	9.5	8.0	A++
	18	18	18	-	-	3.17	3.17	3.17	-	-	9.50 (3.0-11.0)	2.91 (0.30-3.45)	3.27	9.5	8.0	A++
4-unit connection	7	7	7	7	-	2.00	2.00	2.00	2.00	-	8.00 (3.0-10.0)	2.11 (0.30-2.88)	3.80	8.0	8.5	A+++
	7	7	7	9	-	2.00	2.00	2.00	2.50	-	8.50 (3.0-10.7)	2.29 (0.30-3.27)	3.71	8.5	8.4	A++
	7	7	7	12	-	2.00	2.00	2.00	3.50	-	9.50 (3.0-11.0)	2.69 (0.30-3.45)	3.53	9.5	8.3	A++
	7	7	7	14	-	1.90	1.90	1.90	3.80	-	9.50 (3.0-11.0)	2.69 (0.30-3.45)	3.53	9.5	8.3	A++
	7	7	7	18	-	1.71	1.71	1.71	4.37	-	9.50 (3.0-11.0)	2.69 (0.30-3.45)	3.53	9.5	8.3	A++
	7	7	7	22	-	1.55	1.55	1.55	4.85	-	9.50 (3.0-11.0)	2.69 (0.30-3.45)	3.53	9.5	8.3	A++
	7	7	7	24	-	1.48	1.48	1.48	5.06	-	9.50 (3.0-11.0)	2.69 (0.30-3.45)	3.53	9.5	8.3	A++
	7	7	9	9	-	2.00	2.00	2.50	2.50	-	9.00 (3.0-11.0)	2.49 (0.30-3.45)	3.62	9.0	8.4	A++
	7	7	9	12	-	1.90	1.90	2.44	3.26	-	9.50 (3.0-11.0)	2.69 (0.30-3.45)	3.53	9.5	8.3	A++
	7	7	9	14	-	1.80	1.80	2.31	3.59	-	9.50 (3.0-11.0)	2.69 (0.30-3.45)	3.53	9.5	8.3	A++
	7	7	9	18	-	1.62	1.62	2.09	4.17	-	9.50 (3.0-11.0)	2.69 (0.30-3.45)	3.53	9.5	8.3	A++
	7	7	9	22	-	1.48	1.48	1.90	4.64	-	9.50 (3.0-11.0)	2.69 (0.30-3.45)	3.53	9.5	8.3	A++
	7	7	9	24	-	1.41	1.41	1.82	4.86	-	9.50 (3.0-11.0)	2.69 (0.30-3.45)	3.53	9.5	8.3	A++
	7	7	12	12	-	1.75	1.75	3.00	3.00	-	9.50 (3.0-11.0)	2.69 (0.30-3.45)	3.53	9.5	8.3	A++
	7	7	12	14	-	1.66	1.66	2.85	3.33	-	9.50 (3.0-11.0)	2.69 (0.30-3.45)	3.53	9.5	8.3	A++
	7	7	12	18	-	1.51	1.51	2.59	3.89	-	9.50 (3.0-11.0)	2.69 (0.30-3.45)	3.53	9.5	8.3	A++
	7	7	12	22	-	1.39	1.39	2.38	4.34	-	9.50 (3.0-11.0)	2.69 (0.30-3.45)	3.53	9.5	8.3	A++
	7	7	12	24	-	1.33	1.33	2.28	4.56	-	9.50 (3.0-11.0)	2.69 (0.30-3.45)	3.53	9.5	8.3	A++
	7	7	14	14	-	1.58	1.58	3.17	3.17	-	9.50 (3.0-11.0)	2.69 (0.30-3.45)	3.53	9.5	8.3	A++
	7	7	14	18	-	1.45	1.45	2.89	3.71	-	9.50 (3.0-11.0)	2.69 (0.30-3.45)	3.53	9.5	8.3	A++
	7	7	14	22	-	1.33	1.33	2.66	4.18	-	9.50 (3.0-11.0)	2.69 (0.30-3.45)	3.53	9.5	8.3	A++
	7	7	14	24	-	1.28	1.28	2.56	4.38	-	9.50 (3.0-11.0)	2.69 (0.30-3.45)	3.53	9.5	8.3	A++
	7	7	18	18	-	1.33	1.33	3.42	3.42	-	9.50 (3.0-11.0)	2.69 (0.30-3.45)	3.53	9.5	8.3	A++
	7	9	9	9	-	2.00	2.50	2.50	2.50	-	9.50 (3.0-11.0)	2.69 (0.30-3.45)	3.53	9.5	8.3	A++
	7	9	9	12	-	1.80	2.31	2.31	3.08	-	9.50 (3.0-11.0)	2.69 (0.30-3.45)	3.53	9.5	8.3	A++
	7	9	9	14	-	1.71	2.19	2.19	3.41	-	9.50 (3.0-11.0)	2.69 (0.30-3.45)	3.53	9.5	8.3	A++
	7	9	9	18	-	1.54	1.99	1.99	3.98	-	9.50 (3.0-11.0)	2.69 (0.30-3.45)	3.53	9.5	8.3	A++
	7	9	9	22	-	1.41	1.82	1.82	4.45	-	9.50 (3.0-11.0)	2.69 (0.30-3.45)	3.53	9.5	8.3	A++
	7	9	9	24	-	1.36	1.74	1.74	4.66	-	9.50 (3.0-11.0)	2.69 (0.30-3.45)	3.53	9.5	8.3	A++
	7	9	12	12	-	1.66	2.14	2.85	2.85	-	9.50 (3.0-11.0)	2.69 (0.30-3.45)	3.53	9.5	8.3	A++
	7	9	12	14	-	1.58	2.04	2.71	3.17	-	9.50 (3.0-11.0)	2.69 (0.30-3.45)	3.53	9.5	8.3	A++
	7	9	12	18	-	1.44	1.86	2.48	3.72	-	9.50 (3.0-11.0)	2.69 (0.30-3.45)	3.53	9.5	8.3	A++
	7	9	12	22	-	1.33	1.71	2.28	4.18	-	9.50 (3.0-11.0)	2.69 (0.30-3.45)	3.53	9.5	8.3	A++
	7	9	12	24	-	1.28	1.64	2.19	4.39	-	9.50 (3.0-11.0)	2.69 (0.30-3.45)	3.53	9.5	8.3	A++
	7	9	14	14	-	1.51	1.95	3.02	3.02	-	9.50 (3.0-11.0)	2.69 (0.30-3.45)	3.53	9.5	8.3	A++
	7	9	14	18	-	1.39	1.78	2.77	3.56	-	9.50 (3.0-11.0)	2.69 (0.30-3.45)	3.53	9.5	8.3	A++
	7	9	14	22	-	1.28	1.64	2.56	4.02	-	9.50 (3.0-11.0)	2.69 (0.30-3.45)	3.53	9.5	8.3	A++
	7	9	14	24	-	1.23	1.58	2.46	4.23	-	9.50 (3.0-11.0)	2.69 (0.30-3.45)	3.53	9.5	8.3	A++
	7	9	18	18	-	1.28	1.64	3.29	3.29	-	9.50 (3.0-11.0)	2.69 (0.30-3.45)	3.53	9.5	8.3	A++
	7	12	12	12	-	1.55	2.65	2.65	2.65	-	9.50 (3.0-11.0)	2.69 (0.30-3.45)	3.53	9.5	8.3	A++
	7	12	12	14	-	1.48	2.53	2.53	2.96	-	9.50 (3.0-11.0)	2.69 (0.30-3.45)	3.53	9.5	8.3	A++
	7	12	12	18	-	1.35	2.33	2.33	3.49	-	9.50 (3.0-11.0)	2.69 (0.30-3.45)	3.53	9.5	8.3	A++
	7	12	14	14	-	1.41	2.43	2.83	2.83	-	9.50 (3.0-11.0)	2.69 (0.30-3.45)	3.53	9.5	8.3	A++
	7	12	14	18	-	1.30	2.24	2.61	3.35	-	9.50 (3.0-11.0)	2.69 (0.30-3.45)	3.53	9.5	8.3	A++
	7	14	14	14	-	1.37	2.71	2.71	2.71	-	9.50 (3.0-11.0)	2.69 (0.30-3.45)	3.53	9.5	8.3	A++

5-unit Multi-split cooling

AOYG36KBTA5	Combination of Indoor Units					Cooling Operation									
						Cooling Capacity						Input Power (Min. - Max.)	EER	Seasonal Data	
						Unit 1	Unit 2	Unit 3	Unit 4	Unit 5	Total Capacity (Min. - Max.)			Pdesign	SEER	Energy efficiency
						kW	kW	kW	kW	kW	kW	kW		kW		
4-unit connection	7	14	14	18	-	1.25	2.51	2.51	3.23	-	9.50 (3.0-11.0)	2.69 (0.30-3.45)	3.53	9.5	8.3	A++
	9	9	9	9	-	2.38	2.38	2.38	2.38	-	9.50 (3.0-11.0)	2.69 (0.30-3.45)	3.53	9.5	8.3	A++
	9	9	9	12	-	2.19	2.19	2.19	2.93	-	9.50 (3.0-11.0)	2.69 (0.30-3.45)	3.53	9.5	8.3	A++
	9	9	9	14	-	2.09	2.09	2.09	3.23	-	9.50 (3.0-11.0)	2.69 (0.30-3.45)	3.53	9.5	8.3	A++
	9	9	9	18	-	1.90	1.90	1.90	3.80	-	9.50 (3.0-11.0)	2.69 (0.30-3.45)	3.53	9.5	8.3	A++
	9	9	9	22	-	1.74	1.74	1.74	4.28	-	9.50 (3.0-11.0)	2.69 (0.30-3.45)	3.53	9.5	8.3	A++
	9	9	9	24	-	1.68	1.68	1.68	4.46	-	9.50 (3.0-11.0)	2.69 (0.30-3.45)	3.53	9.5	8.3	A++
	9	9	12	12	-	2.04	2.04	2.71	2.71	-	9.50 (3.0-11.0)	2.69 (0.30-3.45)	3.53	9.5	8.3	A++
	9	9	12	14	-	1.94	1.94	2.59	3.03	-	9.50 (3.0-11.0)	2.69 (0.30-3.45)	3.53	9.5	8.3	A++
	9	9	12	18	-	1.78	1.78	2.38	3.56	-	9.50 (3.0-11.0)	2.69 (0.30-3.45)	3.53	9.5	8.3	A++
	9	9	12	22	-	1.64	1.64	2.19	4.03	-	9.50 (3.0-11.0)	2.69 (0.30-3.45)	3.53	9.5	8.3	A++
	9	9	12	24	-	1.58	1.58	2.11	4.23	-	9.50 (3.0-11.0)	2.69 (0.30-3.45)	3.53	9.5	8.3	A++
	9	9	14	14	-	1.86	1.86	2.89	2.89	-	9.50 (3.0-11.0)	2.69 (0.30-3.45)	3.53	9.5	8.3	A++
	9	9	14	18	-	1.71	1.71	2.66	3.42	-	9.50 (3.0-11.0)	2.69 (0.30-3.45)	3.53	9.5	8.3	A++
	9	9	18	18	-	1.58	1.58	3.17	3.17	-	9.50 (3.0-11.0)	2.69 (0.30-3.45)	3.53	9.5	8.3	A++
	9	12	12	12	-	1.91	2.53	2.53	2.53	-	9.50 (3.0-11.0)	2.69 (0.30-3.45)	3.53	9.5	8.3	A++
	9	12	12	14	-	1.81	2.43	2.43	2.83	-	9.50 (3.0-11.0)	2.69 (0.30-3.45)	3.53	9.5	8.3	A++
	9	12	12	18	-	1.67	2.24	2.24	3.35	-	9.50 (3.0-11.0)	2.69 (0.30-3.45)	3.53	9.5	8.3	A++
	9	12	14	14	-	1.74	2.34	2.71	2.71	-	9.50 (3.0-11.0)	2.69 (0.30-3.45)	3.53	9.5	8.3	A++
	9	12	14	18	-	1.61	2.15	2.51	3.23	-	9.50 (3.0-11.0)	2.69 (0.30-3.45)	3.53	9.5	8.3	A++
	9	14	14	14	-	1.67	2.61	2.61	2.61	-	9.50 (3.0-11.0)	2.69 (0.30-3.45)	3.53	9.5	8.3	A++
	12	12	12	12	-	2.38	2.38	2.38	2.38	-	9.50 (3.0-11.0)	2.69 (0.30-3.45)	3.53	9.5	8.3	A++
	12	12	12	14	-	2.28	2.28	2.28	2.66	-	9.50 (3.0-11.0)	2.69 (0.30-3.45)	3.53	9.5	8.3	A++
	12	12	12	18	-	2.11	2.11	2.11	3.17	-	9.50 (3.0-11.0)	2.69 (0.30-3.45)	3.53	9.5	8.3	A++
	12	12	14	14	-	2.19	2.19	2.56	2.56	-	9.50 (3.0-11.0)	2.69 (0.30-3.45)	3.53	9.5	8.3	A++
	12	14	14	14	-	2.12	2.46	2.46	2.46	-	9.50 (3.0-11.0)	2.69 (0.30-3.45)	3.53	9.5	8.3	A++
5-unit connection	7	7	7	7	-	1.90	1.90	1.90	1.90	1.90	9.50 (3.0-11.0)	2.50 (0.30-3.45)	3.80	9.5	8.5	A+++
	7	7	7	7	9	1.80	1.80	1.80	1.80	2.30	9.50 (3.0-11.0)	2.50 (0.30-3.45)	3.80	9.5	8.5	A+++
	7	7	7	7	12	1.66	1.66	1.66	1.66	2.86	9.50 (3.0-11.0)	2.50 (0.30-3.45)	3.80	9.5	8.5	A+++
	7	7	7	7	14	1.58	1.58	1.58	1.58	3.18	9.50 (3.0-11.0)	2.50 (0.30-3.45)	3.80	9.5	8.5	A+++
	7	7	7	7	18	1.45	1.45	1.45	1.45	3.70	9.50 (3.0-11.0)	2.50 (0.30-3.45)	3.80	9.5	8.5	A+++
	7	7	7	7	22*1	1.33	1.33	1.33	1.33	4.18	9.50 (3.0-11.0)	2.50 (0.30-3.45)	3.80	9.5	8.5	A+++
	7	7	7	7	24	1.28	1.28	1.28	1.28	4.38	9.50 (3.0-11.0)	2.50 (0.30-3.45)	3.80	9.5	8.5	A+++
	7	7	7	9	9	1.70	1.70	1.70	2.20	2.20	9.50 (3.0-11.0)	2.50 (0.30-3.45)	3.80	9.5	8.5	A+++
	7	7	7	9	12	1.58	1.58	1.58	2.04	2.72	9.50 (3.0-11.0)	2.50 (0.30-3.45)	3.80	9.5	8.5	A+++
	7	7	7	9	14	1.51	1.51	1.51	1.94	3.03	9.50 (3.0-11.0)	2.50 (0.30-3.45)	3.80	9.5	8.5	A+++
	7	7	7	9	18	1.39	1.39	1.39	1.77	3.56	9.50 (3.0-11.0)	2.50 (0.30-3.45)	3.80	9.5	8.5	A+++
	7	7	7	9	22*1	1.28	1.28	1.28	1.64	4.02	9.50 (3.0-11.0)	2.50 (0.30-3.45)	3.80	9.5	8.5	A+++
	7	7	7	9	24	1.23	1.23	1.23	1.58	4.23	9.50 (3.0-11.0)	2.50 (0.30-3.45)	3.80	9.5	8.5	A+++
	7	7	7	12	12	1.48	1.48	1.48	2.53	2.53	9.50 (3.0-11.0)	2.50 (0.30-3.45)	3.80	9.5	8.5	A+++
	7	7	7	12	14	1.41	1.41	1.41	2.43	2.84	9.50 (3.0-11.0)	2.50 (0.30-3.45)	3.80	9.5	8.5	A+++
	7	7	7	12	18	1.30	1.30	1.30	2.24	3.36	9.50 (3.0-11.0)	2.50 (0.30-3.45)	3.80	9.5	8.5	A+++
	7	7	7	14	14	1.36	1.36	1.36	2.71	2.71	9.50 (3.0-11.0)	2.50 (0.30-3.45)	3.80	9.5	8.5	A+++
	7	7	7	14	18	1.25	1.25	1.25	2.51	3.24	9.50 (3.0-11.0)	2.50 (0.30-3.45)	3.80	9.5	8.5

5-unit Multi-split Combination Table–Heating

5-unit Multi-split heating

AOYG36KBTA5	Combination of Indoor Units					Heating Operation										
						Heating Capacity						Input Power (Min. - Max.)	COP	Seasonal Data		
						Unit 1	Unit 2	Unit 3	Unit 4	Unit 5	Total Capacity (Min. - Max.)			Pdesign	SCOP	Energy efficiency
						kW	kW	kW	kW	kW	kW	kW		kW		
2-unit connection	7	24	-	-	-	2.39	8.21	-	-	-	10.60 (3.5-12.0)	2.65 (0.25-3.25)	4.00	7.0	4.3	A+
	9	22	-	-	-	3.00	7.20	-	-	-	10.20 (3.5-12.0)	2.52 (0.25-3.25)	4.04	6.8	4.3	A+
	9	24	-	-	-	2.89	7.71	-	-	-	10.60 (3.5-12.0)	2.65 (0.25-3.25)	4.00	7.0	4.3	A+
	12	22	-	-	-	3.74	6.86	-	-	-	10.60 (3.5-12.0)	2.65 (0.25-3.25)	4.00	7.0	4.3	A+
	12	24	-	-	-	3.53	7.07	-	-	-	10.60 (3.5-12.0)	2.65 (0.25-3.25)	4.00	7.0	4.3	A+
	14	22	-	-	-	4.12	6.48	-	-	-	10.60 (3.5-12.0)	2.65 (0.25-3.25)	4.00	7.0	4.3	A+
	14	24	-	-	-	3.91	6.69	-	-	-	10.60 (3.5-12.0)	2.65 (0.25-3.25)	4.00	7.0	4.3	A+
	18	18	-	-	-	5.30	5.30	-	-	-	10.60 (3.5-12.0)	2.65 (0.25-3.25)	4.00	7.0	4.3	A+
	18	22	-	-	-	4.77	5.83	-	-	-	10.60 (3.5-12.0)	2.65 (0.25-3.25)	4.00	7.0	4.3	A+
	18	24	-	-	-	4.54	6.06	-	-	-	10.60 (3.5-12.0)	2.65 (0.25-3.25)	4.00	7.0	4.3	A+
	22	22	-	-	-	5.30	5.30	-	-	-	10.60 (3.5-12.0)	2.65 (0.25-3.25)	4.00	7.0	4.3	A+
	22	24	-	-	-	5.07	5.53	-	-	-	10.60 (3.5-12.0)	2.65 (0.25-3.25)	4.00	7.0	4.3	A+
	24	24	-	-	-	5.30	5.30	-	-	-	10.60 (3.5-12.0)	2.65 (0.25-3.25)	4.00	7.0	4.3	A+
3-unit connection	7	7	14	-	-	2.40	2.40	4.80	-	-	9.60 (3.5-11.2)	2.25 (0.25-2.87)	4.26	6.5	4.5	A+
	7	7	18	-	-	2.32	2.32	5.96	-	-	10.60 (3.5-12.0)	2.54 (0.25-3.25)	4.18	7.0	4.4	A+
	7	7	22	-	-	2.06	2.06	6.48	-	-	10.60 (3.5-12.0)	2.54 (0.25-3.25)	4.18	7.0	4.4	A+
	7	7	24	-	-	1.95	1.95	6.70	-	-	10.60 (3.5-12.0)	2.54 (0.25-3.25)	4.18	7.0	4.4	A+
	7	9	12	-	-	2.40	3.00	4.20	-	-	9.60 (3.5-11.2)	2.25 (0.25-2.87)	4.26	6.5	4.5	A+
	7	9	14	-	-	2.40	3.00	4.80	-	-	10.20 (3.5-12.0)	2.42 (0.25-3.25)	4.21	6.8	4.4	A+
	7	9	18	-	-	2.18	2.81	5.61	-	-	10.60 (3.5-12.0)	2.54 (0.25-3.25)	4.18	7.0	4.4	A+
	7	9	22	-	-	1.95	2.51	6.14	-	-	10.60 (3.5-12.0)	2.54 (0.25-3.25)	4.18	7.0	4.4	A+
	7	9	24	-	-	1.85	2.39	6.36	-	-	10.60 (3.5-12.0)	2.54 (0.25-3.25)	4.18	7.0	4.4	A+
	7	12	12	-	-	2.40	4.10	4.10	-	-	10.60 (3.5-12.0)	2.54 (0.25-3.25)	4.18	7.0	4.4	A+
	7	12	14	-	-	2.25	3.85	4.50	-	-	10.60 (3.5-12.0)	2.54 (0.25-3.25)	4.18	7.0	4.4	A+
	7	12	18	-	-	2.00	3.44	5.16	-	-	10.60 (3.5-12.0)	2.54 (0.25-3.25)	4.18	7.0	4.4	A+
	7	12	22	-	-	1.81	3.10	5.69	-	-	10.60 (3.5-12.0)	2.54 (0.25-3.25)	4.18	7.0	4.4	A+
	7	12	24	-	-	1.72	2.96	5.92	-	-	10.60 (3.5-12.0)	2.54 (0.25-3.25)	4.18	7.0	4.4	A+
	7	14	14	-	-	2.12	4.24	4.24	-	-	10.60 (3.5-12.0)	2.54 (0.25-3.25)	4.18	7.0	4.4	A+
	7	14	18	-	-	1.90	3.81	4.89	-	-	10.60 (3.5-12.0)	2.54 (0.25-3.25)	4.18	7.0	4.4	A+
	7	14	22	-	-	1.73	3.45	5.42	-	-	10.60 (3.5-12.0)	2.54 (0.25-3.25)	4.18	7.0	4.4	A+
	7	14	24	-	-	1.65	3.30	5.65	-	-	10.60 (3.5-12.0)	2.54 (0.25-3.25)	4.18	7.0	4.4	A+
	7	18	18	-	-	1.72	4.44	4.44	-	-	10.60 (3.5-12.0)	2.54 (0.25-3.25)	4.18	7.0	4.4	A+
	7	18	22	-	-	1.58	4.06	4.96	-	-	10.60 (3.5-12.0)	2.54 (0.25-3.25)	4.18	7.0	4.4	A+
	7	18	24	-	-	1.51	3.89	5.20	-	-	10.60 (3.5-12.0)	2.54 (0.25-3.25)	4.18	7.0	4.4	A+
	9	9	9	-	-	3.00	3.00	3.00	-	-	9.00 (3.5-10.8)	2.09 (0.25-2.70)	4.31	6.0	4.5	A+
	9	9	12	-	-	3.00	3.00	4.20	-	-	10.20 (3.5-12.0)	2.42 (0.25-3.25)	4.21	6.8	4.4	A+
	9	9	14	-	-	2.98	2.98	4.64	-	-	10.60 (3.5-12.0)	2.54 (0.25-3.25)	4.18	7.0	4.4	A+
	9	9	18	-	-	2.65	2.65	5.30	-	-	10.60 (3.5-12.0)	2.54 (0.25-3.25)	4.18	7.0	4.4	A+
	9	9	22	-	-	2.39	2.39	5.82	-	-	10.60 (3.5-12.0)	2.54 (0.25-3.25)	4.18	7.0	4.4	A+
	9	9	24	-	-	2.27	2.27	6.06	-	-	10.60 (3.5-12.0)	2.54 (0.25-3.25)	4.18	7.0	4.4	A+
	9	12	12	-	-	2.90	3.85	3.85	-	-	10.60 (3.5-12.0)	2.54 (0.25-3.25)	4.18	7.0	4.4	A+
	9	12	14	-	-	2.73	3.63	4.24	-	-	10.60 (3.5-12.0)	2.54 (0.25-3.25)	4.18	7.0	4.4	A+
	9	12	18	-	-	2.45	3.26	4.89	-	-	10.60 (3.5-12.0)	2.54 (0.25-3.25)	4.18	7.0	4.4	A+
	9	12	22	-	-	2.22	2.96	5.42	-	-	10.60 (3.5-12.0)	2.54 (0.25-3.25)	4.18	7.0	4.4	A+
	9	12	24	-	-	2.12	2.83	5.65	-	-	10.60 (3.5-12.0)	2.54 (0.25-3.25)	4.18	7.0	4.4	A+
	9	14	14	-	-	2.58	4.01	4.01	-	-	10.60 (3.5-12.0)	2.54 (0.25-3.25)	4.18	7.0	4.4	A+
	9	14	18	-	-	2.33	3.62	4.65	-	-	10.60 (3.5-12.0)	2.54 (0.25-3.25)	4.18	7.0	4.4	A+
	9	14	22	-	-	2.12	3.30	5.18	-	-	10.60 (3.5-12.0)	2.54 (0.25-3.25)	4.18	7.0	4.4	A+
	9	14	24	-	-	2.03	3.16	5.41	-	-	10.60 (3.5-12.0)	2.54 (0.25-3.25)	4.18	7.0	4.4	A+
	9	18	18	-	-	2.12	4.24	4.24	-	-	10.60 (3.5-12.0)	2.54 (0.25-3.25)	4.18	7.0	4.4	A+
	9	18	22	-	-	1.95	3.89	4.76	-	-	10.60 (3.5-12.0)	2.54 (0.25-3.25)	4.18	7.0	4.4	A+
	9	18	24	-	-	1.87	3.74	4.99	-	-	10.60 (3.5-12.0)	2.54 (0.25-3.25)	4.18	7.0	4.4	A+
	12	12	12	-	-	3.53	3.53	3.53	-	-	10.60 (3.5-12.0)	2.54 (0.25-3.25)	4.18	7.0	4.4	A+
	12	12	14	-	-	3.35	3.35	3.90	-	-	10.60 (3.5-12.0)	2.54 (0.25-3.25)	4.18	7.0	4.4	A+
	12	12	18	-	-	3.03	3.03	4.54	-	-	10.60 (3.5-12.0)	2.54 (0.25-3.25)	4.18	7.0	4.4	A+
	12	12	22	-	-	2.77	2.77	5.06	-	-	10.60 (3.5-12.0)	2.54 (0.25-3.25)	4.18	7.0	4.4	A+
	12	12	24	-	-	2.65	2.65	5.30	-	-	10.60 (3.5-12.0)	2.54 (0.25-3.25)	4.18	7.0	4.4	A+
	12	14	14	-	-	3.18	3.71	3.71	-	-	10.60 (3.5-12.0)	2.54 (0.25-3.25)	4.18	7.0	4.4	A+
	12	14	18	-	-	2.89	3.37	4.34	-	-	10.60 (3.5-12.0)	2.54 (0.25-3.25)	4.18	7.0	4.4	A+
	12	14	22	-	-	2.65	3.09	4.86	-	-	10.60 (3.5-12.0)	2.54 (0.25-3.25)	4.18	7.0	4.4	A+
	12	14	24	-	-	2.54	2.97	5.09	-	-	10.60 (3.5-12.0)	2.54 (0.25-3.25)	4.18	7.0	4.4	A+
	12	18	18	-	-	2.64	3.98	3.98	-	-	10.60 (3.5-12.0)	2.54 (0.25-3.25)	4.18	7.0	4.4	A+
	12	18	22	-	-	2.45	3.67	4.48	-	-	10.60 (3.5-12.0)	2.54 (0.25-3.25)	4.18	7.0	4.4	A+
	12	18	24	-	-	2.36	3.53	4.71	-	-	10.60 (3.5-12.0)	2.54 (0.25-3.25)	4.18	7.0	4.4	A+
	14	14	14	-	-	3.53	3.53	3.53	-	-	10.60 (3.5-12.0)	2.54 (0.25-3.25)	4.18	7.0	4.4	A+
	14	14	18	-	-	3.23	3.23	4.14	-	-	10.60 (3.5-12.0)	2.54 (0.25-3.25)	4.18	7.0	4.4	A+
	14	14	22	-	-	2.97	2.97	4.66	-	-	10.60 (3.5-12.0)	2.54 (0.25-3.25)	4.18	7.0	4.4	A+
	14	14	24	-	-	2.85	2.85	4.90	-	-	10.60 (3.5-12.0)	2.54 (0.25-3.25)	4.18	7.0	4.4	A+
	14	18	18	-	-	2.96	3.82	3.82	-	-	10.60 (3.5-12.0)	2.54 (0.25-3.25)	4.18	7.0	4.4	A+
	18	18	18	-	-	3.53	3.53	3.53	-	-	10.60 (3.5-12.0)	2.54 (0.25-3.25)	4.18	7.0	4.4	A+
4-unit connection	7	7	7	7	-	2.40	2.40	2.40	2.40	-	9.60 (3.5-11.2)	2.17 (0.25-2.87)	4.42	6.5	4.6	A++
	7	7	7	9	-	2.40	2.40	2.40	3.00	-	10.20 (3.5-12.0)	2.33 (0.25-3.25)	4.37	6.8	4.5	A+
	7	7	7	12	-	2.25	2.25	2.25	3.85	-	10.60 (3.5-12.0)	2.44 (0.25-3.25)	4.34	7.0	4.5	A+
	7	7	7	14	-	2.12	2.12	2.12	4.24	-	10.60 (3.5-12.0)	2.44 (0.25-3.25)	4.34	7.0	4.5	A+
	7	7	7	18	-	1.90	1.90	1.90	4.90	-	10.60 (3.5-12.0)	2.44 (0.25-3.25)	4.34	7.0	4.5	A+
	7	7	7	22	-	1.73	1.73	1.73	5.41	-	10.60 (3.5-12.0)	2.44 (0.25-3.25)	4.34	7.0	4.5	A+
	7	7	7	24	-	1.65	1.65	1.65	5.65	-	10.60 (3.5-12.0)	2.44 (0.25-3.25)	4.34	7.0	4.5	A+
	7	7	9	9	-	2.32	2.32	2.98	2.98	-	10.60 (3.5-12.0)	2.44 (0.25-3.25)	4.34	7.0	4.5	A+
	7	7	9	12	-	2.12	2.12	2.73	3.63	-	10.60 (3.5-12.0)	2.44 (0.25-3.25)	4.34	7.0	4.5	A+
	7	7	9	14	-	2.01	2.01	2.57	4.01	-	10.60 (3.5-12.0)	2.44 (0.25-3.25)	4.34	7.0	4.5	A+
	7	7	9	18	-	1.81	1.81	2.33	4.65	-	10.60 (3.5-12.0)	2.44 (0.25-3.25)	4.34	7.0	4.5	A+
	7	7	9	22	-	1.65	1.65	2.12	5.18	-	10.60 (3.5-12.0)	2.44 (0.25-3.25)	4.34	7.0	4.5	A+
	7	7	9	24	-	1.58	1.58	2.03	5.41	-	10.60 (3.5-12.0)	2.44 (0.25-3.25)	4.34	7.0	4.5	A+
	7	7	12	12	-	1.95	1.95	3.35	3.35	-	10.60 (3.5-12.0)	2.44 (0.25-3.25)	4.34	7.0	4.5	A+
	7	7	12	14	-	1.86	1.86	3.17	3.71	-	10.60 (3.5-12.0)	2.44 (0.25-3.25)	4.34	7.0	4.5	A+
	7	7	12	18	-	1.69	1.69	2.88	4.34	-	10.60 (3.5-12.0)	2.44 (0.25-3.25)	4.34	7.0	4.5	A+
	7	7	12	22	-	1.55	1.55	2.64	4.86	-	10.60 (3.5-12.0)	2.44 (0.25-3.25)	4.34	7.0	4.5	A+
	7	7	12	24	-	1.48	1.48	2.54	5.10	-	10.60 (3.5-12.0)	2.44 (0.25-3.25)	4.34	7.0	4.5	A+
	7	7	14	14	-	1.77	1.77	3.53	3.53	-	10.60 (3.5-12.0)	2.44 (0.25-3.25)	4.34	7.0	4.5	A+
	7	7	14	18	-	1.61	1.61	3.23	4.15	-	10.60 (3.5-12.0)	2.44 (0.25-3.25)	4.34	7.0	4.5	A+
	7	7	14	22	-	1.48	1.48	2.97	4.67	-	10.60 (3.5-12.0)	2.44 (0.25-3.25)	4.34	7.0	4.5	A+
	7	7	14	24	-	1.43	1.43	2.85	4.89	-	10.60 (3.5-12.0)	2.44 (0.25-3.25)	4.34	7.0	4.5	A+
	7	7	18	18	-	1.48	1.48	3.82	3.82	-	10.60 (3.5-12.0)	2.44 (0.25-3.25)	4.34	7.0	4.5	A+
	7	9	9	9	-	2.17	2.81	2.81	2.81	-	10.60 (3.5-12.0)	2.44 (0.25-3.25)	4.34	7.0	4.5	A+
	7	9	9	12	-	2.00	2.58	2.58	3.44	-	10.60 (3.5-12.0)	2.44 (0.25-3.25)	4.34	7.0	4.5	A+
	7	9	9	14	-	1.89	2.45	2.45	3.81	-	10.60 (3.5-12.0)	2.44 (0.25-3.25)	4.34	7.0	4.5	A+
	7	9	9	18	-	1.72	2.22	2.22	4.44	-	10.60 (3.5-12.0)	2.44 (0.25-3.25)	4.34	7.0	4.5	A+
	7	9	9	22	-	1.58	2.03	2.03	4.96	-	10.60 (3.5-12.0)	2.44 (0.25-3.25)	4.34	7.0	4.5	A+
	7	9	9	24	-	1.51	1.95	1.95	5.19	-	10.60 (3.5-12.0)	2.44 (0.25-3.25)	4.34	7.0	4.5	A+
	7	9	12	12	-	1.85	2.39	3.18	3.18	-	10.60 (3.5-12.0)	2.44 (0.25-3.25)	4.34	7.0	4.5	A+
	7	9	12	14	-	1.77	2.27	3.03	3.53	-	10.60 (3.5-12.0)	2.44 (0.25-3.25)	4.34	7.0	4.5	A+
	7	9	12	18	-	1.61	2.07	2.77	4.15	-	10.60 (3.5-12.0)	2.44 (0.25-3.25)	4.34	7.0	4.5	A+
	7	9	12	22	-	1.48	1.91	2.54	4.67	-	10.60 (3.5-12.0)	2.44 (0.25-3.25)	4.34	7.0	4.5	A+
	7	9	12	24	-	1.43	1.83	2.45	4.89	-	10.60 (3.5-12.0)	2.44 (0.25-3.25)	4.34	7.0	4.5	A+
	7	9	14	14	-	1.69	2.17	3.37	3.37	-	10.60 (3.5-12.0)	2.44 (0.25-3.25)	4.34	7.0	4.5	A+
	7	9	14	18	-	1.54	1.99	3.09	3.98	-	10.60 (3.5-12.0)	2.44 (0.25-3.25)	4.34	7.0	4.5	A+
	7	9	14	22	-	1.43	1.83	2.85	4.49	-	10.60 (3.5-12.0)	2.44 (0.25-3.25)	4.34	7.0	4.5	A+
	7	9	14	24	-	1.37	1.77	2.75	4.71	-	10.60 (3.5-12.0)	2.44 (0.25-3.25)	4.34	7.0	4.5	A+
	7	9	18	18	-	1.43	1.83	3.67	3.67	-	10.60 (3.5-12.0)	2.44 (0.25-3.25)	4.34	7.0	4.5	A+
	7	12	12	12	-	1.72	2.96	2.96	2.96	-	10.60 (3.5-12.0)	2.44 (0.25-3.25)	4.34	7.0	4.5	A+
	7	12	14	14	-	1.64	2.83	2.83	3.30	-	10.60 (3.5-12.0)	2.44 (0.25-3.25)	4.34	7.0	4.5	A+
	7	12	14	18	-	1.51	2.60	2.60	3.89	-	10.60 (3.5-12.0)	2.44 (0.25-3.25)	4.34	7.0	4.5	A+
	7	12	14	14	-	1.57	2.71	3.16	3.16	-	10.60 (3.5-12.0)	2.44 (0.25-3.25)	4.34	7.0	4.5	A+
	7	12	14	18	-	1.45	2.49	2.91	3.75	-	10.60 (3.5-12.0)	2.44 (0.25-3.25)	4.34	7.0	4.5	A+
	7	14	14	14	-	1.51	3.03	3.03	3.03	-	10.60 (3.5-12.0)	2.44 (0.25-3.25)	4.34	7.0	4.5	A+

5-unit Multi-split heating

AOYG36KBTA5	Combination of Indoor Units					Heating Operation										
						Heating Capacity						Input Power (Min. - Max.)	COP	Seasonal Data		
						Unit 1	Unit 2	Unit 3	Unit 4	Unit 5	Total Capacity (Min. - Max.)			Pdesign	SCOP	Energy efficiency
						kW	kW	kW	kW	kW	kW	kW		kW		
4-unit connection	7	14	14	18	-	1.40	2.80	2.80	3.60	-	10.60 (3.5-12.0)	2.44 (0.25-3.25)	4.34	7.0	4.5	A+
	9	9	9	9	-	2.65	2.65	2.65	2.65	-	10.60 (3.5-12.0)	2.44 (0.25-3.25)	4.34	7.0	4.5	A+
	9	9	9	12	-	2.45	2.45	2.45	3.25	-	10.60 (3.5-12.0)	2.44 (0.25-3.25)	4.34	7.0	4.5	A+
	9	9	9	14	-	2.33	2.33	2.33	3.61	-	10.60 (3.5-12.0)	2.44 (0.25-3.25)	4.34	7.0	4.5	A+
	9	9	9	18	-	2.12	2.12	2.12	4.24	-	10.60 (3.5-12.0)	2.44 (0.25-3.25)	4.34	7.0	4.5	A+
	9	9	9	22	-	1.95	1.95	1.95	4.75	-	10.60 (3.5-12.0)	2.44 (0.25-3.25)	4.34	7.0	4.5	A+
	9	9	9	24	-	1.87	1.87	1.87	4.99	-	10.60 (3.5-12.0)	2.44 (0.25-3.25)	4.34	7.0	4.5	A+
	9	9	12	12	-	2.27	2.27	3.03	3.03	-	10.60 (3.5-12.0)	2.44 (0.25-3.25)	4.34	7.0	4.5	A+
	9	9	12	14	-	2.17	2.17	2.89	3.37	-	10.60 (3.5-12.0)	2.44 (0.25-3.25)	4.34	7.0	4.5	A+
	9	9	12	18	-	1.99	1.99	2.64	3.98	-	10.60 (3.5-12.0)	2.44 (0.25-3.25)	4.34	7.0	4.5	A+
	9	9	12	22	-	1.83	1.83	2.45	4.49	-	10.60 (3.5-12.0)	2.44 (0.25-3.25)	4.34	7.0	4.5	A+
	9	9	12	24	-	1.77	1.77	2.35	4.71	-	10.60 (3.5-12.0)	2.44 (0.25-3.25)	4.34	7.0	4.5	A+
	9	9	14	14	-	2.07	2.07	3.23	3.23	-	10.60 (3.5-12.0)	2.44 (0.25-3.25)	4.34	7.0	4.5	A+
	9	9	14	18	-	1.91	1.91	2.96	3.82	-	10.60 (3.5-12.0)	2.44 (0.25-3.25)	4.34	7.0	4.5	A+
	9	9	18	18	-	1.77	1.77	3.53	3.53	-	10.60 (3.5-12.0)	2.44 (0.25-3.25)	4.34	7.0	4.5	A+
	9	12	12	12	-	2.11	2.83	2.83	2.83	-	10.60 (3.5-12.0)	2.44 (0.25-3.25)	4.34	7.0	4.5	A+
	9	12	12	14	-	2.02	2.71	2.71	3.16	-	10.60 (3.5-12.0)	2.44 (0.25-3.25)	4.34	7.0	4.5	A+
	9	12	12	18	-	1.87	2.49	2.49	3.75	-	10.60 (3.5-12.0)	2.44 (0.25-3.25)	4.34	7.0	4.5	A+
	9	12	14	14	-	1.94	2.60	3.03	3.03	-	10.60 (3.5-12.0)	2.44 (0.25-3.25)	4.34	7.0	4.5	A+
	9	12	14	18	-	1.80	2.40	2.80	3.60	-	10.60 (3.5-12.0)	2.44 (0.25-3.25)	4.34	7.0	4.5	A+
	9	14	14	14	-	1.87	2.91	2.91	2.91	-	10.60 (3.5-12.0)	2.44 (0.25-3.25)	4.34	7.0	4.5	A+
	12	12	12	12	-	2.65	2.65	2.65	2.65	-	10.60 (3.5-12.0)	2.44 (0.25-3.25)	4.34	7.0	4.5	A+
	12	12	12	14	-	2.54	2.54	2.54	2.98	-	10.60 (3.5-12.0)	2.44 (0.25-3.25)	4.34	7.0	4.5	A+
	12	12	12	18	-	2.36	2.36	2.36	3.52	-	10.60 (3.5-12.0)	2.44 (0.25-3.25)	4.34	7.0	4.5	A+
	12	12	14	14	-	2.45	2.45	2.85	2.85	-	10.60 (3.5-12.0)	2.44 (0.25-3.25)	4.34	7.0	4.5	A+
	12	14	14	14	-	2.35	2.75	2.75	2.75	-	10.60 (3.5-12.0)	2.44 (0.25-3.25)	4.34	7.0	4.5	A+
5-unit connection	7	7	7	7	7	2.12	2.12	2.12	2.12	2.12	10.60 (3.5-12.0)	2.36 (0.25-3.25)	4.50	7.0	4.6	A++
	7	7	7	7	9	2.01	2.01	2.01	2.01	2.56	10.60 (3.5-12.0)	2.36 (0.25-3.25)	4.50	7.0	4.6	A++
	7	7	7	7	12	1.86	1.86	1.86	1.86	3.16	10.60 (3.5-12.0)	2.36 (0.25-3.25)	4.50	7.0	4.6	A++
	7	7	7	7	14	1.77	1.77	1.77	1.77	3.52	10.60 (3.5-12.0)	2.36 (0.25-3.25)	4.50	7.0	4.6	A++
	7	7	7	7	18	1.61	1.61	1.61	1.61	4.16	10.60 (3.5-12.0)	2.36 (0.25-3.25)	4.50	7.0	4.6	A++
	7	7	7	7	22*1	1.48	1.48	1.48	1.48	4.68	10.60 (3.5-12.0)	2.36 (0.25-3.25)	4.50	7.0	4.6	A++
	7	7	7	7	24	1.43	1.43	1.43	1.43	4.88	10.60 (3.5-12.0)	2.36 (0.25-3.25)	4.50	7.0	4.6	A++
	7	7	7	9	9	1.90	1.90	1.90	2.45	2.45	10.60 (3.5-12.0)	2.36 (0.25-3.25)	4.50	7.0	4.6	A++
	7	7	7	9	12	1.77	1.77	1.77	2.26	3.03	10.60 (3.5-12.0)	2.36 (0.25-3.25)	4.50	7.0	4.6	A++
	7	7	7	9	14	1.69	1.69	1.69	2.16	3.37	10.60 (3.5-12.0)	2.36 (0.25-3.25)	4.50	7.0	4.6	A++
	7	7	7	9	18	1.55	1.55	1.55	1.99	3.96	10.60 (3.5-12.0)	2.36 (0.25-3.25)	4.50	7.0	4.6	A++
	7	7	7	9	22*1	1.43	1.43	1.43	1.83	4.48	10.60 (3.5-12.0)	2.36 (0.25-3.25)	4.50	7.0	4.6	A++
	7	7	7	9	24	1.37	1.37	1.37	1.77	4.72	10.60 (3.5-12.0)	2.36 (0.25-3.25)	4.50	7.0	4.6	A++
	7	7	7	12	12	1.64	1.64	1.64	2.84	2.84	10.60 (3.5-12.0)	2.36 (0.25-3.25)	4.50	7.0	4.6	A++
	7	7	7	12	14	1.58	1.58	1.58	2.70	3.16	10.60 (3.5-12.0)	2.36 (0.25-3.25)	4.50	7.0	4.6	A++
	7	7	7	12	18	1.45	1.45	1.45	2.49	3.76	10.60 (3.5-12.0)	2.36 (0.25-3.25)	4.50	7.0	4.6	A++
	7	7	7	14	14	1.52	1.52	1.52	3.02	3.02	10.60 (3.5-12.0)	2.36 (0.25-3.25)	4.50	7.0	4.6	A++
	7	7	7	14	18	1.40	1.40	1.40	2.80	3.60	10.60 (3.5-12.0)	2.36 (0.25-3.25)	4.50	7.0	4.6	A++
	7	7	9	9	9	1.82	1.82	2

6-unit Multi-split Combination Table-Cooling

6-unit Multi-split cooling

AOYG45LBLA6	Combination of Indoor Units						Cooling Operation								
							Cooling Capacity							Input Power (Min. - Max.)	EER
							Unit 1	Unit 2	Unit 3	Unit 4	Unit 5	Unit 6	Total Capacity (Min. - Max.)		
							kW	kW	kW	kW	kW	kW	kW	kW	
2-unit connection	12	24	-	-	-	-	3.50	7.00	-	-	-	-	10.5 (3.5-11.5)	3.06 (0.8-3.32)	3.43
	14	24	-	-	-	-	4.00	7.00	-	-	-	-	11.0 (3.5-12.1)	3.28 (0.8-3.70)	3.35
	18	18	-	-	-	-	5.00	5.00	-	-	-	-	10.0 (3.5-11.5)	2.92 (0.8-3.32)	3.42
	18	24	-	-	-	-	5.00	7.00	-	-	-	-	12.0 (3.5-13.4)	3.75 (0.8-4.46)	3.20
	24	24	-	-	-	-	6.25	6.25	-	-	-	-	12.5 (3.5-14.0)	4.01 (0.8-4.84)	3.12
3-unit connection	7	7	24	-	-	-	2.00	2.00	7.00	-	-	-	11.0 (3.5-12.1)	3.19 (0.8-3.70)	3.45
	7	9	18	-	-	-	2.00	2.50	5.00	-	-	-	9.5 (3.5-10.8)	2.55 (0.8-2.93)	3.73
	7	9	24	-	-	-	2.00	2.50	7.00	-	-	-	11.5 (3.5-12.7)	3.41 (0.8-4.08)	3.37
	7	12	18	-	-	-	2.00	3.50	5.00	-	-	-	10.5 (3.5-11.8)	3.02 (0.8-3.51)	3.48
	7	12	24	-	-	-	2.00	3.50	6.90	-	-	-	12.4 (3.5-13.7)	3.82 (0.8-4.65)	3.25
	7	14	14	-	-	-	2.00	4.00	4.00	-	-	-	10.0 (3.5-11.1)	2.81 (0.8-3.13)	3.56
	7	14	18	-	-	-	2.00	4.00	5.00	-	-	-	11.0 (3.5-12.4)	3.23 (0.8-3.89)	3.41
	7	14	24	-	-	-	1.94	3.89	6.67	-	-	-	12.5 (3.5-14.0)	3.89 (0.8-4.84)	3.21
	7	18	18	-	-	-	2.00	5.00	5.00	-	-	-	12.0 (3.5-13.7)	3.69 (0.8-4.65)	3.25
	7	18	24	-	-	-	1.79	4.59	6.12	-	-	-	12.5 (3.5-14.0)	3.87 (0.8-4.84)	3.23
	7	24	24	-	-	-	1.60	5.45	5.45	-	-	-	12.5 (3.5-14.0)	3.83 (0.8-4.84)	3.26
	9	9	18	-	-	-	2.50	2.50	5.00	-	-	-	10.0 (3.5-11.5)	2.84 (0.8-3.32)	3.52
	9	9	24	-	-	-	2.50	2.50	7.00	-	-	-	12.0 (3.5-13.4)	3.65 (0.8-4.46)	3.29
	9	12	14	-	-	-	2.50	3.50	4.00	-	-	-	10.0 (3.5-11.1)	2.81 (0.8-3.13)	3.56
	9	12	18	-	-	-	2.50	3.50	5.00	-	-	-	11.0 (3.5-12.4)	3.23 (0.8-3.89)	3.41
	9	12	24	-	-	-	2.50	3.33	6.67	-	-	-	12.5 (3.5-14.0)	3.89 (0.8-4.84)	3.21
	9	14	14	-	-	-	2.50	4.00	4.00	-	-	-	10.5 (3.5-11.8)	3.02 (0.8-3.51)	3.48
	9	14	18	-	-	-	2.50	4.00	5.00	-	-	-	11.5 (3.5-13.0)	3.45 (0.8-4.27)	3.33
	9	14	24	-	-	-	2.40	3.72	6.38	-	-	-	12.5 (3.5-14.0)	3.88 (0.8-4.84)	3.22
	9	18	18	-	-	-	2.50	5.00	5.00	-	-	-	12.5 (3.5-14.0)	3.89 (0.8-4.84)	3.21
	9	18	24	-	-	-	2.21	4.41	5.88	-	-	-	12.5 (3.5-14.0)	3.86 (0.8-4.84)	3.24
	9	24	24	-	-	-	1.98	5.26	5.26	-	-	-	12.5 (3.5-14.0)	3.82 (0.8-4.84)	3.27
	12	12	14	-	-	-	3.50	3.50	3.50	-	-	-	10.5 (3.5-11.5)	2.98 (0.8-3.32)	3.52
	12	12	14	-	-	-	3.50	3.50	4.00	-	-	-	11.0 (3.5-12.1)	3.19 (0.8-3.70)	3.45
	12	12	18	-	-	-	3.50	3.50	5.00	-	-	-	12.0 (3.5-13.4)	3.65 (0.8-4.46)	3.29
	12	12	24	-	-	-	3.13	3.13	6.24	-	-	-	12.5 (3.5-14.0)	3.87 (0.8-4.84)	3.23
	12	14	14	-	-	-	3.50	4.00	4.00	-	-	-	11.5 (3.5-12.7)	3.41 (0.8-4.08)	3.37
	12	14	18	-	-	-	3.50	4.00	5.00	-	-	-	12.5 (3.5-14.0)	3.89 (0.8-4.84)	3.21
	12	14	24	-	-	-	3.00	3.50	6.00	-	-	-	12.5 (3.5-14.0)	3.86 (0.8-4.84)	3.24
	12	18	18	-	-	-	3.12	4.69	4.69	-	-	-	12.5 (3.5-14.0)	3.87 (0.8-4.84)	3.23
	12	18	24	-	-	-	2.78	4.17	5.55	-	-	-	12.5 (3.5-14.0)	3.85 (0.8-4.84)	3.25
	12	24	24	-	-	-	2.50	5.00	5.00	-	-	-	12.5 (3.5-14.0)	3.81 (0.8-4.84)	3.28
	14	14	14	-	-	-	4.00	4.00	4.00	-	-	-	12.0 (3.5-13.4)	3.65 (0.8-4.46)	3.29
	14	14	18	-	-	-	3.80	3.80	4.90	-	-	-	12.5 (3.5-14.0)	3.88 (0.8-4.84)	3.22
	14	14	24	-	-	-	3.37	3.37	5.76	-	-	-	12.5 (3.5-14.0)	3.85 (0.8-4.84)	3.25
	14	18	18	-	-	-	3.50	4.50	4.50	-	-	-	12.5 (3.5-14.0)	3.86 (0.8-4.84)	3.24
	14	18	24	-	-	-	3.13	4.02	5.35	-	-	-	12.5 (3.5-14.0)	3.83 (0.8-4.84)	3.26
	14	24	24	-	-	-	2.82	4.84	4.84	-	-	-	12.5 (3.5-14.0)	3.80 (0.8-4.84)	3.29
	18	18	18	-	-	-	4.17	4.17	4.17	-	-	-	12.5 (3.5-14.0)	3.85 (0.8-4.84)	3.25
	18	18	24	-	-	-	3.75	3.75	5.00	-	-	-	12.5 (3.5-14.0)	3.81 (0.8-4.84)	3.28
4-unit connection	7	7	7	14	-	-	2.00	2.00	2.00	4.00	-	-	10.0 (3.5-11.1)	2.50 (0.8-3.13)	4.00
	7	7	7	18	-	-	2.00	2.00	2.00	5.00	-	-	11.0 (3.5-12.4)	3.06 (0.8-3.89)	3.59
	7	7	7	24	-	-	1.94	1.94	1.94	6.68	-	-	12.5 (3.5-14.0)	3.77 (0.8-4.84)	3.32
	7	7	9	12	-	-	2.00	2.00	2.50	3.50	-	-	10.0 (3.5-11.1)	2.50 (0.8-3.13)	4.00
	7	7	9	14	-	-	2.00	2.00	2.50	4.00	-	-	10.5 (3.5-11.8)	2.79 (0.8-3.51)	3.76
	7	7	9	18	-	-	2.00	2.00	2.50	5.00	-	-	11.5 (3.5-13.0)	3.33 (0.8-4.27)	3.45
	7	7	9	24	-	-	1.86	1.86	2.39	6.39	-	-	12.5 (3.5-14.0)	3.75 (0.8-4.84)	3.33
	7	7	12	12	-	-	2.00	2.00	3.50	3.50	-	-	11.0 (3.5-12.1)	3.00 (0.8-3.70)	3.67
	7	7	12	14	-	-	2.00	2.00	3.50	4.00	-	-	11.5 (3.5-12.7)	3.27 (0.8-4.08)	3.52
	7	7	12	18	-	-	2.00	2.00	3.50	5.00	-	-	12.5 (3.5-14.0)	3.78 (0.8-4.84)	3.31
	7	7	12	24	-	-	1.75	1.75	3.00	6.00	-	-	12.5 (3.5-14.0)	3.74 (0.8-4.84)	3.34
	7	7	14	14	-	-	2.00	2.00	4.00	4.00	-	-	12.0 (3.5-13.4)	3.51 (0.8-4.46)	3.42
	7	7	14	18	-	-	1.90	1.90	3.80	4.90	-	-	12.5 (3.5-14.0)	3.77 (0.8-4.84)	3.32
	7	7	14	24	-	-	1.68	1.68	3.37	5.77	-	-	12.5 (3.5-14.0)	3.73 (0.8-4.84)	3.35
	7	7	18	18	-	-	1.75	1.75	4.50	4.50	-	-	12.5 (3.5-14.0)	3.74 (0.8-4.84)	3.34
	7	7	18	24	-	-	1.56	1.56	4.02	5.36	-	-	12.5 (3.5-14.0)	3.70 (0.8-4.84)	3.38
	7	7	24	24	-	-	1.41	1.41	4.84	4.84	-	-	12.5 (3.5-14.0)	3.67 (0.8-4.84)	3.41
	7	9	9	9	-	-	2.00	2.50	2.50	2.50	-	-	9.5 (3.5-10.8)	2.31 (0.8-2.93)	4.11
	7	9	9	12	-	-	2.00	2.50	2.50	3.50	-	-	10.5 (3.5-11.8)	2.79 (0.8-3.51)	3.76
	7	9	9	14	-	-	2.00	2.50	2.50	4.00	-	-	11.0 (3.5-12.4)	3.06 (0.8-3.89)	3.59
	7	9	9	18	-	-	2.00	2.50	2.50	5.00	-	-	12.0 (3.5-13.7)	3.57 (0.8-4.65)	3.36
	7	9	9	24	-	-	1.79	2.30	2.30	6.11	-	-	12.5 (3.5-14.0)	3.74 (0.8-4.84)	3.34
	7	9	12	12	-	-	2.00	2.50	3.50	3.50	-	-	11.5 (3.5-12.7)	3.27 (0.8-4.08)	3.52
	7	9	12	14	-	-	2.00	2.50	3.50	4.00	-	-	12.0 (3.5-13.4)	3.51 (0.8-4.46)	3.42
	7	9	12	18	-	-	1.90	2.45	3.26	4.89	-	-	12.5 (3.5-14.0)	3.77 (0.8-4.84)	3.32
	7	9	12	24	-	-	1.68	2.16	2.88	5.78	-	-	12.5 (3.5-14.0)	3.73 (0.8-4.84)	3.35
	7	9	14	14	-	-	2.00	2.50	4.00	4.00	-	-	12.5 (3.5-14.0)	3.78 (0.8-4.84)	3.31
	7	9	14	18	-	-	1.82	2.34	3.65	4.69	-	-	12.5 (3.5-14.0)	3.75 (0.8-4.84)	3.33
	7	9	14	24	-	-	1.62	2.08	3.24	5.56	-	-	12.5 (3.5-14.0)	3.71 (0.8-4.84)	3.37
	7	9	18	18	-	-	1.68	2.16	4.33	4.33	-	-	12.5 (3.5-14.0)	3.73 (0.8-4.84)	3.35
	7	9	18	24	-	-	1.51	1.94	3.88	5.17	-	-	12.5 (3.5-14.0)	3.69 (0.8-4.84)	3.39
	7	12	12	12	-	-	1.90	3.50	3.50	3.50	-	-	12.4 (3.5-13.7)	3.69 (0.8-4.65)	3.36
	7	12	12	14	-	-	1.94	3.33	3.33	3.90	-	-	12.5 (3.5-14.0)	3.77 (0.8-4.84)	3.32
	7	12	12	18	-	-	1.79	3.06	3.06	4.59	-	-	12.5 (3.5-14.0)	3.74 (0.8-4.84)	3.34
	7	12	12	24	-	-	1.59	2.73	2.73	5.45	-	-	12.5 (3.5-14.0)	3.71 (0.8-4.84)	3.37
	7	12	14	14	-	-	1.87	3.19	3.72	3.72	-	-	12.5 (3.5-14.0)	3.75 (0.8-4.84)	3.33
	7	12	14	18	-	-	1.72	2.94	3.43	4.41	-	-	12.5 (3.5-14.0)	3.73 (0.8-4.84)	3.35
	7	12	14	24	-	-	1.54	2.63	3.07	5.26	-	-	12.5 (3.5-14.0)	3.70 (0.8-4.84)	3.38
	7	12	18	18	-	-	1.59	2.73	4.09	4.09	-	-	12.5 (3.5-14.0)	3.71 (0.8-4.84)	3.37
	7	12	18	24	-	-	1.43	2.46	3.69	4.92	-	-	12.5 (3.5-14.0)	3.68 (0.8-4.84)	3.40
	7	14	14	14	-	-	1.79	3.57	3.57	3.57	-	-	12.5 (3.5-14.0)	3.74 (0.8-4.84)	3.34
	7	14	14	18	-	-	1.65	3.30	3.30	4.25	-	-	12.5 (3.5-14.0)	3.72 (0.8-4.84)	3.36
	7	14	14	24	-	-	1.48	2.97	2.97	5.08	-	-	12.5 (3.5-14.0)	3.69 (0.8-4.84)	3.39
	7	14	18	18	-	-	1.53	3.07	3.95	3.95	-	-	12.5 (3.5-14.0)	3.70 (0.8-4.84)	3.38
	7	18	18	18	-	-	1.43	3.69	3.69	3.69	-	-	12.5 (3.5-14.0)	3.68 (0.8-4.84)	3.40
	9	9	9	9	-	-	2.50	2.50	2.50	2.50	-	-	10.0 (3.5-11.5)	2.59 (0.8-3.32)	3.86
	9	9	9	12	-	-	2.50	2.50	2.50	3.50	-	-	11.0 (3.5-12.4)	3.06 (0.8-3.89)	3.59
	9	9	9	14	-	-	2.50	2.50	2.50	4.00	-	-	11.5 (3.5-13.0)	3.33 (0.8-4.27)	3.45
	9	9	9	18	-	-	2.50	2.50	2.50	5.00	-	-	12.5 (3.5-14.0)	3.77 (0.8-4.84)	3.32
	9	9	9	24	-	-	2.21	2.21	2.21	5.87	-	-	12.5 (3.5-14.0)	3.73 (0.8-4.84)	3.35
	9	9	12	12	-	-	2.50	2.50	3.50	3.50	-	-	12.0 (3.5-13.4)	3.51 (0.8-4.46)	3.42
	9	9	12	14	-	-	2.50	2.50	3.50	4.00	-	-	12.5 (3.5-14.0)	3.78 (0.8-4.84)	3.31
	9	9	12	18	-	-	2.34	2.34	3.13	4.69	-	-	12.5 (3.5-14.0)	3.75 (0.8-4.84)	3.33
	9	9	12	24	-	-	2.08	2.08	2.78	5.56	-	-	12.5 (3.5-14.0)	3.71 (0.8-4.84)	3.37
	9	9	14	14	-	-	2.45	2.45	3.80	3.80	-	-	12.5 (3.5-14.0)	3.77 (0.8-4.84)	3.32
	9	9	14	18	-	-	2.25	2.25	3.50	4.50	-	-	12.5 (3.5-14.0)	3.74 (0.8-4.84)	3.34
	9	9	14	24	-	-	2.01	2.01	3.13	5.35	-	-	12.5 (3.5-14.0)	3.70 (0.8-4.84)	3.38
	9	9	18	18	-	-	2.08	2.08	4.17	4.17	-	-	12.5 (3.5-14.0)	3.71 (0.8-4.84)	3.37
	9	9	18	24	-	-	1.88	1.88	3.75	4.99	-	-	12.5 (3.5-14.0)	3.68 (0.8-4.84)	3.40
	9	12	12	12	-	-	2.51	3.33	3.33	3.33	-	-	12.5 (3.5-14.0)	3.77 (0.8-4.84)	3.32
	9	12	12	14	-	-	2.39	3.19	3.19	3.73	-	-	12.5 (3.5-14.0)	3.75 (0.8-4.84)	3.33
	9	12	12	18	-	-	2.21	2.94	2.94	4.41	-	-	12.5 (3.5-14.0)	3.73 (0.8-4.84)	3.35
	9	12	12	24	-	-	1.97	2.63	2.63	5.27	-	-	12.5 (3.5-14.0)	3.70 (0.8-4.84)	3.38
	9	12	14	14	-	-	2.30	3.06	3.57	3.57	-	-	12.5 (3.5-14.0)	3.74 (0.8-4.84)	3.34
	9	12	14	18	-	-	2.12	2.83	3.30	4.25	-	-	12.5 (3.5-14.0)	3.72 (0.8-4.84)	3.36
	9	12	14	24	-	-	1.91	2.54	2.97	5.08	-	-	12.5 (3.5-14.0)	3.69 (0.8-4.84)	3.39
	9	12	18	18	-	-	1.97	2.63	3.95	3.95	-	-	12.5 (3.5-14.0)	3.70 (0.8-4.84)	3.38
	9	14	14	14	-	-	2.21	3.43	3.43	3.43	-	-	12.5 (3.5-14.0)	3.73 (0.8-4.84)	3.35
	9	14	14	18	-	-	2.05	3.18	3.18	4.09	-	-	12.5 (3.5-14.0)	3.71 (0.8-4.84)	3.37
	9	14	14	24	-	-	1.84	2.87	2.87	4.92	-	-	12.5 (3.5-14.0)	3.68 (0.8-4.84)	3.40
	9	14	18	18	-	-	1.91	2.97	3.81	3.81	-	-	12.5 (3.5-14.0)	3.69 (0.8-4.84)	3.39

6-unit Multi-split cooling

AOYG45LBLA6	Combination of Indoor Units						Cooling Operation								
							Cooling Capacity							Input Power (Min. - Max.)	EER
							Unit 1	Unit 2	Unit 3	Unit 4	Unit 5	Unit 6	Total Capacity (Min. - Max.)		
							kW	kW	kW	kW	kW	kW	kW	kW	
4-unit connection	12	12	12	12	-	-	3.13	3.13	3.13	3.13	-	-	12.5 (3.5-14.0)	3.75 (0.8-4.84)	3.33
	12	12	12	14	-	-	3.00	3.00	3.00	3.50	-	-	12.5 (3.5-14.0)	3.74 (0.8-4.84)	3.34
	12	12	12	18	-	-	2.78	2.78	2.78	4.16	-	-	12.5 (3.5-14.0)	3.71 (0.8-4.84)	3.37
	12	12	12	24	-	-	2.50	2.50	2.50	5.00	-	-	12.5 (3.5-14.0)	3.68 (0.8-4.84)	3.40
	12	12	14	14	-	-	2.88	2.88	3.37	3.37	-	-	12.5 (3.5-14.0)	3.73 (0.8-4.84)	3.35
	12	12	14	18	-	-	2.68	2.68	3.13	4.01	-	-	12.5 (3.5-14.0)	3.70 (0.8-4.84)	3.38
	12	12	14	24	-	-	2.42	2.42	2.82	4.84	-	-	12.5 (3.5-14.0)	3.67 (0.8-4.84)	3.41
	12	12	18	18	-	-	2.50	2.50	3.75	3.75	-	-	12.5 (3.5-14.0)	3.68 (0.8-4.84)	3.40
	12	14	14	14	-	-	2.78	3.24	3.24	3.24	-	-	12.5 (3.5-14.0)	3.71 (0.8-4.84)	3.37
	12	14	14	18	-	-	2.59	3.02	3.02	3.87	-	-	12.5 (3.5-14.0)	3.69 (0.8-4.84)	3.39
	12	14	18	18	-	-	2.42	2.82	3.63	3.63	-	-	12.5 (3.5-14.0)	3.67 (0.8-4.84)	3.41
5-unit connection	7	7	7	7	7	-	2.00	2.00	2.00	2.00	2.00	-	10.0 (3.5-11.1)	2.44 (0.8-3.13)	4.10
	7	7	7	7	9	-	2.00	2.00	2.00	2.00	2.50	-	10.5 (3.5-11.8)	2.72 (0.8-3.51)	3.86
	7	7	7	7	12	-	2.00	2.00	2.00	2.00	3.50	-	11.5 (3.5-12.7)	3.18 (0.8-4.08)	3.62
	7	7	7	7	14	-	2.00	2.00	2.00	2.00	4.00	-	12.0 (3.5-13.4)	3.41 (0.8-4.46)	3.52
	7	7	7	7	18	-	1.90	1.90	1.90	1.90	4.90	-	12.5 (3.5-14.0)	3.65 (0.8-4.84)	3.42
	7	7	7	7	24	-	1.68	1.68	1.68	1.68	5.78	-	12.5 (3.5-14.0)	3.61 (0.8-4.84)	3.46
	7	7	7	9	9	-	2.00	2.00	2.00	2.50	2.50	-	11.0 (3.5-12.4)	2.98 (0.8-3.89)	3.69
	7	7	7	9	12	-	2.00	2.00	2.00	2.50	3.50	-	12.0 (3.5-13.4)	3.41 (0.8-4.46)	3.52
	7	7	7	9	14	-	2.00	2.00	2.00	2.50	4.00	-	12.5 (3.5-14.0)	3.67 (0.8-4.84)	3.41
	7	7	7	9	18	-	1.82	1.82	1.82	2.34	4.70	-	12.5 (3.5-14.0)	3.64 (0.8-4.84)	3.43
	7	7	7	9	24	-	1.62	1.62	1.62	2.08	5.56	-	12.5 (3.5-14.0)	3.60 (0.8-4.84)	3.47
	7	7	7	12	12	-	1.94	1.94	1.94	3.34	3.34	-	12.5 (3.5-14.0)	3.65 (0.8-4.84)	3.42
	7	7	7	12	14	-	1.86	1.86	1.86	3.19	3.73	-	12.5 (3.5-14.0)	3.64 (0.8-4.84)	3.43
	7	7	7	12	18	-	1.72	1.72	1.72	2.94	4.40	-	12.5 (3.5-14.0)	3.62 (0.8-4.84)	3.45
	7	7	7	12	24	-	1.54	1.54	1.54	2.63	5.25	-	12.5 (3.5-14.0)	3.58 (0.8-4.84)	3.49
	7	7	7	14	14	-	1.79	1.79	1.79	3.57	3.57	-	12.5 (3.5-14.0)	3.63 (0.8-4.84)	3.44
	7	7	7	14	18	-	1.65	1.65	1.65	3.30	4.25	-	12.5 (3.5-14.0)	3.60 (0.8-4.84)	3.47
	7	7	7	14	24	-	1.48	1.48	1.48	2.97	5.09	-	12.5 (3.5-14.0)	3.57 (0.8-4.84)	3.50
	7	7	7	18	18	-	1.54	1.54	1.54	3.94	3.94	-	12.5 (3.5-14.0)	3.58 (0.8-4.84)	3.49
	7	7	9	9	9	-	2.00	2.00	2.50	2.50	2.50	-	11.5 (3.5-13.0)	3.24 (0.8-4.27)	3.55
	7	7	9	9	12	-	2.00	2.00	2.50	2.50	3.50	-	12.5 (3.5-14.0)	3.67 (0.8-4.84)	3.41
	7	7	9	9	14	-	1.90	1.90	2.45	2.45	3.80	-	12.5 (3.5-14.0)	3.65 (0.8-4.84)	3.42
	7	7	9	9	18	-	1.75	1.75	2.25	2.25	4.50	-	12.5 (3.5-14.0)	3.62 (0.8-4.84)	3.45
	7	7	9	9	24	-	1.56	1.56	2.01	2.01	5.36	-	12.5 (3.5-14.0)	3.59 (0.8-4.84)	3.48
	7	7	9	12	12	-	1.86	1.86	2.40	3.19	3.19	-	12.5 (3.5-14.0)	3.64 (0.8-4.84)	3.43
	7	7	9	12	14	-	1.79	1.79	2.30	3.06	3.56	-	12.5 (3.5-14.0)	3.63 (0.8-4.84)	3.44
	7	7	9	12	18	-	1.65	1.65	2.12	2.83	4.25	-	12.5 (3.5-14.0)	3.60 (0.8-4.84)	3.47
	7	7	9	12	24	-	1.48	1.48	1.91	2.54	5.09	-	12.5 (3.5-14.0)	3.57 (0.8-4.84)	3.50
	7	7	9	14	14	-	1.72	1.72	2.20	3.43	3.43	-	12.5 (3.5-14.0)	3.62 (0.8-4.84)	3.45
	7	7	9	14	18	-	1.59	1.59	2.05	3.18	4.09	-	12.5 (3.5-14.0)	3.59 (0.8-4.84)	3.48
	7	7	9	14	24	-	1.43	1.43	1.84	2.87	4.93	-	12.5 (3.5-14.0)	3.56 (0.8-4.84)	3.51
	7	7	9	18	18	-	1.48	1.48	1.92	3.81	3.81	-	12.5 (3.5-14.0)	3.57 (0.8-4.84)	3.50
	7	7	12	12	12	-	1.75	1.75	3.00	3.00	3.00	-	12.5 (3.5-14.0)	3.62 (0.8-4.84)	3.45
	7	7	12	12	14	-	1.68	1.68	2.88	2.88	3.38	-	12.5 (3.5-14.0)	3.61 (0.8-4.84)	3.46
	7	7	12	12	18	-	1.56	1.56	2.68	2.68	4.02	-	12.5 (3.5-14.0)	3.59 (0.8-4.84)	3.48
	7	7	12	12	24	-	1.41	1.41	2.42	2.42	4.84	-	12.5 (3.5-14.0)	3.55 (0.8-4.84)	3.52
	7	7	12	14	14	-	1.62	1.62	2.78	3.24	3.24	-	12.5 (3.5-14.0)	3.60 (0.8-4.84)	3.47
	7	7	12	14	18	-	1.51	1.51	2.59	3.02	3.87	-	12.5 (3.5-14.0)	3.57 (0.8-4.84)	3.50
	7	7	12	14	24	-	1.41	1.41	2.42	3.63	3.63	-	12.5 (3.5-14.0)	3.55 (0.8-4.84)	3.52
	7	7	14	14	14	-	1.56	1.56	3.13	3.13	3.13	-	12.5 (3.5-14.0)	3.59 (0.8-4.84)	3.48
	7	7	14	14	18	-	1.46	1.46	2.92	2.92	3.74	-	12.5 (3.5-14.0)	3.56 (0.8-4.84)	3.51
	7	9	9	9	9	-	2.00	2.50	2.50	2.50	2.50	-	12.0 (3.5-13.7)	3.47 (0.8-4.65)	3.46
	7	9	9	9	12	-	1.90	2.45	2.45	2.45	3.25	-	12.5 (3.5-14.0)	3.65 (0.8-4.84)	3.42
	7	9	9	9	14	-	1.82	2.34	2.34	2.34	3.66	-	12.5 (3.5-14.0)	3.64 (0.8-4.84)	3.43
	7	9	9	9	18	-	1.68	2.16	2.16	2.16	4.34	-	12.5 (3.5-14.0)	3.61 (0.8-4.84)	3.46
	7	9	9	9	24	-	1.51	1.94	1.94	1.94	5.17	-	12.5 (3.5-14.0)	3.57 (0.8-4.84)	3.50
	7	9	9	12	12	-	1.78	2.30	2.30	3.06	3.06	-	12.5 (3.5-14.0)	3.63 (0.8-4.84)	3.44
	7	9	9	12	14	-	1.72	2.21	2.21	2.94	3.42	-	12.5 (3.5-14.0)	3.62 (0.8-4.84)	3.45
	7	9	9	12	18	-	1.59	2.05	2.05	2.73	4.08	-	12.5 (3.5-14.0)	3.59 (0.8-4.84)	3.48
	7	9	9	12	24	-	1.43	1.84	1.84	2.46	4.93	-	12.5

REFRIGERANT R410A

6-unit Multi-split Multi Combination Table–Cooling/Heating

6-unit Multi-split cooling

AOYG45LBLA6	Combination of Indoor Units						Cooling Operation								
							Cooling Capacity							Input Power (Min. - Max.)	EER
							Unit 1	Unit 2	Unit 3	Unit 4	Unit 5	Unit 6	Total Capacity (Min. - Max.)		
							kW	kW	kW	kW	kW	kW	kW	kW	
6-unit connection	7	7	7	7	7	7	2.00	2.00	2.00	2.00	2.00	2.00	12.0 (3.5-13.4)	3.32 (0.8-4.46)	3.61
	7	7	7	7	7	9	2.00	2.00	2.00	2.00	2.00	2.50	12.5 (3.5-14.0)	3.57 (0.8-4.84)	3.50
	7	7	7	7	7	12	1.86	1.86	1.86	1.86	1.86	3.20	12.5 (3.5-14.0)	3.55 (0.8-4.84)	3.52
	7	7	7	7	7	14	1.79	1.79	1.79	1.79	1.79	3.55	12.5 (3.5-14.0)	3.54 (0.8-4.84)	3.53
	7	7	7	7	7	18	1.65	1.65	1.65	1.65	1.65	4.25	12.5 (3.5-14.0)	3.51 (0.8-4.84)	3.56
	7	7	7	7	7	24	1.48	1.48	1.48	1.48	1.48	5.10	12.5 (3.5-14.0)	3.48 (0.8-4.84)	3.59
	7	7	7	7	9	9	1.90	1.90	1.90	1.90	2.45	2.45	12.5 (3.5-14.0)	3.56 (0.8-4.84)	3.51
	7	7	7	7	9	12	1.79	1.79	1.79	1.79	2.29	3.05	12.5 (3.5-14.0)	3.54 (0.8-4.84)	3.53
	7	7	7	7	9	14	1.72	1.72	1.72	1.72	2.20	3.42	12.5 (3.5-14.0)	3.53 (0.8-4.84)	3.54
	7	7	7	7	9	18	1.59	1.59	1.59	1.59	2.05	4.09	12.5 (3.5-14.0)	3.50 (0.8-4.84)	3.57
	7	7	7	7	9	24	1.43	1.43	1.43	1.43	1.85	4.93	12.5 (3.5-14.0)	3.47 (0.8-4.84)	3.60
	7	7	7	7	12	12	1.68	1.68	1.68	1.68	2.89	2.89	12.5 (3.5-14.0)	3.52 (0.8-4.84)	3.55
	7	7	7	7	12	14	1.62	1.62	1.62	1.62	2.78	3.24	12.5 (3.5-14.0)	3.51 (0.8-4.84)	3.56
	7	7	7	7	12	18	1.51	1.51	1.51	1.51	2.59	3.87	12.5 (3.5-14.0)	3.48 (0.8-4.84)	3.59
	7	7	7	7	14	14	1.56	1.56	1.56	1.56	3.13	3.13	12.5 (3.5-14.0)	3.50 (0.8-4.84)	3.57
	7	7	7	7	14	18	1.46	1.46	1.46	1.46	2.92	3.74	12.5 (3.5-14.0)	3.47 (0.8-4.84)	3.60
	7	7	7	9	9	9	1.82	1.82	1.82	2.34	2.34	2.34	12.5 (3.5-14.0)	3.55 (0.8-4.84)	3.52
	7	7	7	9	9	12	1.72	1.72	1.72	2.21	2.21	2.92	12.5 (3.5-14.0)	3.53 (0.8-4.84)	3.54
	7	7	7	9	9	14	1.65	1.65	1.65	2.12	2.12	3.31	12.5 (3.5-14.0)	3.51 (0.8-4.84)	3.56
	7	7	7	9	9	18	1.54	1.54	1.54	1.97	1.97	3.94	12.5 (3.5-14.0)	3.49 (0.8-4.84)	3.58
	7	7	7	9	12	12	1.62	1.62	1.62	2.08	2.78	2.78	12.5 (3.5-14.0)	3.51 (0.8-4.84)	3.56
	7	7	7	9	12	14	1.56	1.56	1.56	2.01	2.68	3.13	12.5 (3.5-14.0)	3.50 (0.8-4.84)	3.57
	7	7	7	9	12	18	1.46	1.46	1.46	1.88	2.50	3.74	12.5 (3.5-14.0)	3.47 (0.8-4.84)	3.60
	7	7	7	9	14	14	1.51	1.51	1.51	1.93	3.02	3.02	12.5 (3.5-14.0)	3.48 (0.8-4.84)	3.59
	7	7	7	12	12	12	1.54	1.54	1.54	2.63	2.63	2.63	12.5 (3.5-14.0)	3.49 (0.8-4.84)	3.58
	7	7	7	12	12	14	1.48	1.48	1.48	2.54	2.54	2.98	12.5 (3.5-14.0)	3.48 (0.8-4.84)	3.59
	7	7	7	12	14	14	1.43	1.43	1.43	2.47	2.87	2.87	12.5 (3.5-14.0)	3.47 (0.8-4.84)	3.60
	7	7	9	9	9	9	1.75	1.75	2.25	2.25	2.25	2.25	12.5 (3.5-14.0)	3.53 (0.8-4.84)	3.54
	7	7	9	9	9	12	1.65	1.65	2.12	2.12	2.12	2.84	12.5 (3.5-14.0)	3.51 (0.8-4.84)	3.56
	7	7	9	9	9	14	1.59	1.59	2.05	2.05	2.05	3.17	12.5 (3.5-14.0)	3.50 (0.8-4.84)	3.57
	7	7	9	9	9	18	1.48	1.48	1.91	1.91	1.91	3.81	12.5 (3.5-14.0)	3.48 (0.8-4.84)	3.59
	7	7	9	9	12	12	1.56	1.56	2.01	2.01	2.68	2.68	12.5 (3.5-14.0)	3.50 (0.8-4.84)	3.57
	7	7	9	9	12	14	1.51	1.51	1.94	1.94	2.59	3.01	12.5 (3.5-14.0)	3.48 (0.8-4.84)	3.59
	7	7	9	9	12	18	1.41	1.41	1.81	1.81	2.42	3.64	12.5 (3.5-14.0)	3.46 (0.8-4.84)	3.61
	7	7	9	9	14	14	1.46	1.46	1.88	1.88	2.91	2.91	12.5 (3.5-14.0)	3.47 (0.8-4.84)	3.60
	7	7	9	12	12	12	1.48	1.48	1.92	2.54	2.54	2.54	12.5 (3.5-14.0)	3.48 (0.8-4.84)	3.59
	7	7	9	12	12	14	1.43	1.43	1.85	2.46	2.46	2.87	12.5 (3.5-14.0)	3.47 (0.8-4.84)	3.60
	7	7	12	12	12	12	1.41	1.41	2.42	2.42	2.42	2.42	12.5 (3.5-14.0)	3.46 (0.8-4.84)	3.61
	7	9	9	9	9	9	1.70	2.16	2.16	2.16	2.16	2.16	12.5 (3.5-14.0)	3.52 (0.8-4.84)	3.55
	7	9	9	9	9	12	1.59	2.05	2.05	2.05	2.05	2.71	12.5 (3.5-14.0)	3.50 (0.8-4.84)	3.57
	7	9	9	9	9	14	1.54	1.97	1.97	1.97	1.97	3.08	12.5 (3.5-14.0)	3.49 (0.8-4.84)	3.58
	7	9	9	9	12	12	1.50	1.94	1.94	1.94	2.59	2.59	12.5 (3.5-14.0)	3.48 (0.8-4.84)	3.59
	7	9	9	9	12	14	1.46	1.88	1.88	1.88	2.50	2.90	12.5 (3.5-14.0)	3.47 (0.8-4.84)	3.60
	7	9	9	12	12	12	1.44	1.84	1.84	2.46	2.46	2.46	12.5 (3.5-14.0)	3.47 (0.8-4.84)	3.60
	9	9	9	9	9	9	2.08	2.08	2.08	2.08	2.08	2.08	12.5 (3.5-14.0)	3.51 (0.8-4.84)	3.56
	9	9	9	9	9	12	1.97	1.97	1.97	1.97	1.97	2.65	12.5 (3.5-14.0)	3.49 (0.8-4.84)	3.58
	9	9	9	9	12	12	1.88	1.88	1.88	1.88	2.49	2.49	12.5 (3.5-14.0)	3.47 (0.8-4.84)	3.60

Notes: •7: 7000 Btu/h/9: 9000 Btu/h/12: 12000 Btu/h/14: 14000 Btu/h/18: 18000 Btu/h/24: 24000 Btu/h models
•The above specifications apply when connected with a wall-mounted unit.
•2 or more indoor units should be connected.
•Cooling capacity is determined based on 27°CDB/19°CWB (indoor temperature) and 35°CDB (outdoor temperature).
•Pipe Length: 5 m, Height difference: 0 m (Outdoor unit to Indoor unit)
•Total capacity of indoor units connected must be between 9.5 kW and 18.0 kW.

6-unit Multi-split heating

AOYG45LBLA6	Combination of Indoor Units						Heating Operation								
							Heating Capacity							Input Power (Min. - Max.)	COP
							Unit 1	Unit 2	Unit 3	Unit 4	Unit 5	Unit 6	Total Capacity (Min. - Max.)		
							kW	kW	kW	kW	kW	kW	kW	kW	
2 Units	12	24	-	-	-	-	4.07	8.13	-	-	-	-	12.2 (3.5-13.1)	3.41 (0.7-3.54)	3.58
	14	24	-	-	-	-	4.61	7.89	-	-	-	-	12.5 (3.5-13.8)	3.56 (0.7-3.76)	3.51
	18	18	-	-	-	-	6.10	6.10	-	-	-	-	12.2 (3.5-13.1)	3.41 (0.7-3.54)	3.58
	18	24	-	-	-	-	5.66	7.54	-	-	-	-	13.2 (3.5-15.3)	3.78 (0.7-4.20)	3.49
	24	24	-	-	-	-	6.75	6.75	-	-	-	-	13.5 (3.5-16.0)	3.89 (0.7-4.41)	3.47
3-unit connection	7	7	24	-	-	-	2.30	2.30	7.90	-	-	-	12.5 (3.5-13.8)	3.43 (0.7-3.76)	3.64
	7	9	18	-	-	-	2.35	3.02	6.03	-	-	-	11.4 (3.5-12.4)	2.98 (0.7-3.33)	3.83
	7	9	24	-	-	-	2.24	2.88	7.68	-	-	-	12.8 (3.5-14.5)	3.54 (0.7-3.98)	3.62
	7	12	18	-	-	-	2.33	3.99	5.98	-	-	-	12.3 (3.5-13.5)	3.35 (0.7-3.65)	3.67
	7	12	24	-	-	-	2.17	3.71	7.42	-	-	-	13.3 (3.5-15.6)	3.69 (0.7-4.30)	3.60
	7	14	14	-	-	-	2.40	4.80	4.80	-	-	-	12.0 (3.5-12.7)	3.15 (0.7-3.44)	3.81
	7	14	18	-	-	-	2.28	4.56	5.86	-	-	-	12.7 (3.5-14.2)	3.49 (0.7-3.87)	3.64
	7	14	24	-	-	-	2.10	4.20	7.20	-	-	-	13.5 (3.5-16.0)	3.75 (0.7-4.41)	3.60
	7	18	18	-	-	-	2.16	5.57	5.57	-	-	-	13.3 (3.5-15.6)	3.69 (0.7-4.30)	3.60
	7	18	24	-	-	-	1.93	4.96	6.61	-	-	-	13.5 (3.5-16.0)	3.74 (0.7-4.41)	3.61
	7	24	24	-	-	-	1.72	5.89	5.89	-	-	-	13.5 (3.5-16.0)	3.72 (0.7-4.41)	3.63
	9	9	18	-	-	-	3.05	3.05	6.10	-	-	-	12.2 (3.5-13.1)	3.28 (0.7-3.54)	3.72
	9	9	24	-	-	-	2.83	2.83	7.54	-	-	-	13.2 (3.5-15.3)	3.64 (0.7-4.20)	3.63
	9	12	14	-	-	-	3.09	4.11	4.80	-	-	-	12.0 (3.5-12.7)	3.15 (0.7-3.44)	3.81
	9	12	18	-	-	-	2.93	3.91	5.86	-	-	-	12.7 (3.5-14.2)	3.49 (0.7-3.87)	3.64
	9	12	24	-	-	-	2.70	3.60	7.20	-	-	-	13.5 (3.5-16.0)	3.75 (0.7-4.41)	3.60
	9	14	14	-	-	-	3.00	4.65	4.65	-	-	-	12.3 (3.5-13.5)	3.35 (0.7-3.65)	3.67
	9	14	18	-	-	-	2.85	4.44	5.71	-	-	-	13.0 (3.5-14.9)	3.59 (0.7-4.09)	3.62
	9	14	24	-	-	-	2.59	4.02	6.89	-	-	-	13.5 (3.5-16.0)	3.74 (0.7-4.41)	3.61
	9	18	18	-	-	-	2.70	5.40	5.40	-	-	-	13.5 (3.5-16.0)	3.75 (0.7-4.41)	3.60
	9	18	24	-	-	-	2.38	4.76	6.36	-	-	-	13.5 (3.5-16.0)	3.73 (0.7-4.41)	3.62
	9	24	24	-	-	-	2.14	5.68	5.68	-	-	-	13.5 (3.5-16.0)	3.71 (0.7-4.41)	3.64
	12	12	12	-	-	-	4.07	4.07	4.07	-	-	-	12.2 (3.5-13.1)	3.28 (0.7-3.54)	3.72
	12	12	14	-	-	-	3.94	3.95	4.61	-	-	-	12.5 (3.5-13.8)	3.43 (0.7-3.76)	3.64
	12	12	18	-	-	-	3.77	3.77	5.66	-	-	-	13.2 (3.5-15.3)	3.64 (0.7-4.20)	3.63
	12	12	24	-	-	-	3.38	3.38	6.74	-	-	-	13.5 (3.5-16.0)	3.74 (0.7-4.41)	3.61
	12	14	14	-	-	-	3.84	4.48	4.48	-	-	-	12.8 (3.5-14.5)	3.54 (0.7-3.98)	3.62
	12	14	18	-	-	-	3.68	4.30	5.52	-	-	-	13.5 (3.5-16.0)	3.75 (0.7-4.41)	3.60
	12	14	24	-	-	-	3.24	3.78	6.48	-	-	-	13.5 (3.5-16.0)	3.74 (0.7-4.41)	3.61
	12	18	18	-	-	-	3.38	5.06	5.06	-	-	-	13.5 (3.5-16.0)	3.74 (0.7-4.41)	3.61
	12	18	24	-	-	-	3.00	4.50	6.00	-	-	-	13.5 (3.5-16.0)	3.72 (0.7-4.41)	3.63
	12	24	24	-	-	-	2.70	5.40	5.40	-	-	-	13.5 (3.5-16.0)	3.71 (0.7-4.41)	3.64
	14	14	14	-	-	-	4.40	4.40	4.40	-	-	-	13.2 (3.5-15.3)	3.64 (0.7-4.20)	3.63
	14	14	18	-	-	-	4.11	4.11	5.28	-	-	-	13.5 (3.5-16.0)	3.75 (0.7-4.41)	3.60
	14	14	24	-	-	-	3.63	3.63	6.24	-	-	-	13.5 (3.5-16.0)	3.73 (0.7-4.41)	3.62
	14	18	18	-	-	-	3.78	4.86	4.86	-	-	-	13.5 (3.5-16.0)	3.74 (0.7-4.41)	3.61
	14	18	24	-	-	-	3.38	4.34	5.78	-	-	-	13.5 (3.5-16.0)	3.72 (0.7-4.41)	3.63
	14	24	24	-	-	-	3.04	5.23	5.23	-	-	-	13.5 (3.5-16.0)	3.70 (0.7-4.41)	3.65
	18	18	18	-	-	-	4.50	4.50	4.50	-	-	-	13.5 (3.5-16.0)	3.72 (0.7-4.41)	3.63
	18	18	24	-	-	-	4.05	4.05	5.40	-	-	-	13.5 (3.5-16.0)	3.71 (0.7-4.41)	3.64
4-unit connection	7	7	7	14	-	-	2.40	2.40	2.40	4.80	-	-	12.0 (3.5-12.7)	2.98 (0.7-3.44)	4.03
	7	7	7	18	-	-	2.28	2.28	2.28	5.86	-	-	12.7 (3.5-14.2)	3.35 (0.7-3.87)	3.79
	7	7	7	24	-	-	2.10	2.10	2.10	7.20	-	-	13.5 (3.5-16.0)	3.61 (0.7-4.41)	3.74
	7	7	9	12	-	-	2.40	2.40	3.09	4.11	-	-	12.0 (3.5-12.7)	2.98 (0.7-3.44)	4.03
	7	7	9	14	-	-	2.33	2.33	2.99	4.65	-	-	12.3 (3.5-13.5)	3.19 (0.7-3.65)	3.86
	7	7	9	18	-	-	2.22	2.22	2.85	5.71	-	-	13.0 (3.5-14.9)	3.46 (0.7-4.09)	3.76
	7	7	9	24	-	-	2.01	2.01	2.59	6.89	-	-	13.5 (3.5-16.0)	3.60 (0.7-4.41)	3.75
	7	7	12	12	-	-	2.30	2.30	3.95	3.95	-	-	12.5 (3.5-13.8)	3.28 (0.7-3.76)	3.81
	7	7	12	14	-	-	2.24	2.24	3.84	4.48	-	-	12.8 (3.5-14.5)	3.41 (0.7-3.98)	3.75
	7	7	12	18	-	-	2.15	2.15	3.68	5.52	-	-	13.5 (3.5-16.0)	3.61 (0.7-4.41)	3.74
	7	7	12	24	-	-	1.89	1.89	3.24	6.48	-	-	13.5 (3.5-16.0)	3.60 (0.7-4.41)	3.75
	7	7	14	14	-	-	2.20	2.20	4.40	4.40	-	-	13.2 (3.5-15.3)	3.52 (0.7-4.20)	3.75
	7	7	14	18	-	-	2.05	2.05	4.11	5.29	-	-	13.5 (3.5-16.0)	3.61 (0.7-4.41)	3.74
	7	7	14	24	-	-	1.82	1.82	3.63	6.23	-	-	13.5 (3.5-16.0)	3.59 (0.7-4.41)	3.76
	7	7	18	18	-	-	1.89	1.89	4.86	4.86	-	-	13.5 (3.5-16.0)	3.60 (0.7-4.41)	3.75
	7	7	18	24	-	-	1.69	1.69	4.34	5.78	-	-	13.5 (3.5-16.0)	3.58 (0.7-4.41)	3.77
	7	7	24	24	-	-	1.52	1.52	5.23	5.23	-	-	13.5 (3.5-16.0)	3.56 (0.7-4.41)	3.79
	7	9	9	9	-	-	2.34	3.02	3.02	3.02	-	-	11.4 (3.5-12.4)	2.82 (0.7-3.33)	4.04
	7	9	9	12	-	-	2.33	2.99	2.99	3.99	-	-	12.3 (3.5-13.5)	3.19 (0.7-3.65)	3.86
	7	9	9	14	-	-	2.28	2.93	2.93	4.56	-	-	12.7 (3.5-14.2)	3.35 (0.7-3.87)	3.79
	7	9	9	18	-	-	2.17	2.78	2.78	5.57	-	-	13.3 (3.5-15.6)	3.56 (0.7-4.30)	3.74
	7	9	9	24	-	-	1.93	2.48	2.48	6.61	-	-	13.5 (3.5-16.0)	3.60 (0.7-4.41)	3.75
	7	9	12	12	-	-	2.24	2.88	3.84	3.84	-	-	12.8 (3.5-14.5)	3.41 (0.7-3.98)	3.75
	7	9	12	14	-	-	2.20	2.83	3.77	4.40	-	-	13.2 (3.5-15.3)	3.52 (0.7-4.20)	3.75
	7	9	12	18	-	-	2.05	2.64	3.52	5.29	-	-	13.5 (3.5-16.0)	3.61 (0.7-4.41)	3.74
	7	9	12	24	-	-	1.82	2.34	3.12	6.22	-	-	13.5 (3.5-16.0)	3.59 (0.7-4.41)	3.76
	7	9	14	14	-	-	2.15	2.75	4.30	4.30	-	-	13.5 (3.5-16.0)	3.61 (0.7-4.41)	3.74
	7	9	14	18	-	-	1.97	2.53	3.94	5.06	-	-	13.5 (3.5-16.0)	3.60 (0.7-4.41)	3.75
	7	9	14	24	-	-	1.75	2.25	3.50	6.00	-	-	13.5 (3.5-16.0)	3.58 (0.7-4.41)	3.77
	7	9	18	18	-	-	1.82	2.34	4.67	4.67	-	-	13.5 (3.5-16.0)	3.59 (0.7-4.41)	3.76
	7	9	18	24	-	-	1.63	2.09	4.19	5.59	-	-	13.5 (3.5-16.0)	3.57 (0.7-4.41)	3.78
	7	12	12	12	-	-	2.17	3.71	3.71	3.71	-	-	13.3 (3.5-15.6)	3.56 (0.7-4.30)	3.74
	7	12	12	14	-	-	2.10	3.60	3.60	4.20	-	-	13.5 (3.5-16.0)	3.61 (0.7-4.41)	3.74
	7	12	12	18	-	-	1.93	3.31	3.31	4.95	-	-	13.5 (3.5-16.0)	3.60 (0.7-4.41)	3.75
	7	12	12	24	-	-	1.72	2.95	2.95	5.88	-	-	13.5 (3.5-16.0)	3.58 (0.7-4.41)	3.77
	7	12	14	14	-	-	2.01	3.45	4.02	4.02	-	-	13.5 (3.5-16.0)	3.60 (0.7-4.41)	3.75
	7	12	14	18	-	-	1.85	3.18	3.71	4.76	-	-	13.5 (3.5-16.0)	3.59 (0.7-4.41)	3.76
	7	12	14	24	-	-	1.66	2.84	3.32	5.68	-	-	13.5 (3.5-16.0)	3.57 (0.7-4.41)	3.78
	7	12	18	18	-	-	1.72	2.94	4.42	4.42	-	-	13.5 (3.5-16.0)	3.58 (0.7-4.41)	3.77
	7	12	18	24	-	-	1.55	2.66	3.98	5.31	-	-	13.5 (3.5-16.0)	3.56 (0.7-4.41)	3.79
	7	14	14	14	-	-	1.92	3.86	3.86	3.86	-	-	13.5 (3.5-16.0)	3.60 (0.7-4.41)	3.75
	7	14	14	18	-	-	1.78	3.57	3.57	4.58	-	-	13.5 (3.5-16.0)	3.59 (0.7-4.41)	3.76
	7	14	14	24	-	-	1.60	3.20	3.20	5.50	-	-	13.5 (3.5-16.0)	3.57 (0.7-4.41)	3.78
	7	14	18	18	-	-	1.66	3.32	4.26	4.26	-	-	13.5 (3.5-16.0)	3.57 (0.7-4.41)	3.78
	7	18	18	18	-	-	1.56	3.98	3.98	3.98	-	-	13.5 (3.5-16.0)	3.56 (0.7-4.41)	3.79
	9	9	9	9	-	-	3.05	3.05	3.05	3.05	-	-	12.2 (3.5-13.1)	3.09 (0.7-3.54)	3.95
	9	9	9	12	-	-	2.93	2.93	2.93	3.91	-	-	12.7 (3.5-14.2)	3.35 (0.7-3.87)	3.79
	9	9	9	14	-	-	2.85	2.85	2.85	4.45	-	-	13.0 (3.5-14.9)	3.46 (0.7-4.09)	3.76
	9	9	9	18	-	-	2.70	2.70	2.70	5.40	-	-	13.5 (3.5-16.0)	3.61 (0.7-4.41)	3.74
	9	9	9	24	-	-	2.38	2.38	2.38	6.36	-	-	13.5 (3.5-16.0)	3.59 (0.7-4.41)	3.76
	9	9	12	12	-	-	2.83	2.83	3.77	3.77	-	-	13.2 (3.5-15.3)	3.52 (0.7-4.20)	3.75
	9	9	12	14	-	-	2.76	2.76	3.68	4.30	-	-	13.5 (3.5-16.0)	3.61 (0.7-4.41)	3.74
	9	9	12	18	-	-	2.53	2.53	3.38	5.06	-	-	13.5 (3.5-16.0)	3.60 (0.7-4.41)	3.75
	9	9	12	24	-	-	2.25	2.25	3.00	6.00	-	-	13.5 (3.5-16.0)	3.58 (0.7-4.41)	3.77
	9	9	14	14	-	-	2.64	2.64	4.11	4.11	-	-	13.5 (3.5-16.0)	3.61 (0.7-4.41)	3.74
	9	9	14	18	-	-	2.43	2.43	3.78	4.86	-	-	13.5 (3.5-16.0)	3.60 (0.7-4.41)	3.75
	9	9	14	24	-	-	2.17	2.17	3.38	5.78	-	-	13.5 (3.5-16.0)	3.58 (0.7-4.41)	3.77
	9	9	18	18	-	-	2.25	2.25	4.50	4.50	-	-	13.5 (3.5-16.0)	3.58 (0.7-4.41)	3.77
	9	9	18	24	-	-	2.03	2.03	4.05	5.39	-	-	13.5 (3.5-16.0)	3.57 (0.7-4.41)	3.78
	9	12	12	12	-	-	2.70	3.60	3.60	3.60	-	-	13.5 (3.5-16.0)	3.61 (0.7-4.41)	3.74
	9	12	12	14	-	-	2.59	3.45	3.45	4.01	-	-	13.5 (3.5-16.0)	3.60 (0.7-4.41)	3.75
	9	12	12	18	-	-	2.38	3.18	3.18	4.76	-	-	13.5 (3.5-16.0)	3.59 (0.7-4.41)	3.76
	9	12	12	24	-	-	2.13	2.84	2.84	5.69	-	-	13.5 (3.5-16.0)	3.57 (0.7-4.41)	3.78
	9	12	14	14	-	-	2.48	3.30	3.86	3.86	-	-	13.5 (3.5-16.0)	3.60 (0.7-4.41)	3.75
	9	12	14	18	-	-	2.29	3.06	3.57	4.58	-	-	13.5 (3.5-16.0)	3.59 (0.7-4.41)	3.76
	9	12	14	24	-	-	2.06	2.75	3.20	5.49	-	-	13.5 (3.5-16.0)	3.57 (0.7-4.41)	3.78
	9	12	18	18	-	-	2.13	2.85	4.26	4.26	-	-	13.5 (3.5-16.0)	3.57 (0.7-4.41)	3.78
	9	14	14	14	-	-	2.37	3.71	3.71	3.71	-	-	13.5 (3.5-16.0)	3.59 (0.7-4.41)	3.76
	9	14	14	18	-	-	2.21	3.44	3.44	4.41	-	-	13.5 (3.5-16.0)	3.58 (0.7-4.41)	3.77
	9	14	14	24	-	-	1.99	3.10	3.10	5.31	-	-	13.5 (3.5-16.0)	3.56 (0.7-4.41)	3.79
	9	14	18	18	-	-	2.06	3.20	4.12	4.12	-	-	13.5 (3.5-16.0)	3.57 (0.7-4.41)	3.78

6-unit Multi-split Combination Table-Heating

6-unit Multi-split heating

AOYG45LBLA6	Combination of Indoor Units						Heating Operation								
							Heating Capacity							Input Power (Min. - Max.)	COP
							Unit 1	Unit 2	Unit 3	Unit 4	Unit 5	Unit 6	Total Capacity (Min. - Max.)		
							kW	kW	kW	kW	kW	kW	kW	kW	
4-unit connection	12	12	12	12	-	-	3.38	3.38	3.38	3.38	-	-	13.5 (3.5-16.0)	3.60 (0.7-4.41)	3.75
	12	12	12	14	-	-	3.24	3.24	3.24	3.78	-	-	13.5 (3.5-16.0)	3.60 (0.7-4.41)	3.75
	12	12	12	18	-	-	3.00	3.00	3.00	4.50	-	-	13.5 (3.5-16.0)	3.58 (0.7-4.41)	3.77
	12	12	12	24	-	-	2.70	2.70	2.70	5.40	-	-	13.5 (3.5-16.0)	3.57 (0.7-4.41)	3.78
	12	12	14	14	-	-	3.12	3.12	3.63	3.63	-	-	13.5 (3.5-16.0)	3.59 (0.7-4.41)	3.76
	12	12	14	18	-	-	2.89	2.89	3.38	4.34	-	-	13.5 (3.5-16.0)	3.58 (0.7-4.41)	3.77
	12	12	14	24	-	-	2.61	2.61	3.05	5.23	-	-	13.5 (3.5-16.0)	3.56 (0.7-4.41)	3.79
	12	12	18	18	-	-	2.70	2.70	4.05	4.05	-	-	13.5 (3.5-16.0)	3.57 (0.7-4.41)	3.78
	12	14	14	14	-	-	3.00	3.50	3.50	3.50	-	-	13.5 (3.5-16.0)	3.58 (0.7-4.41)	3.77
	12	14	14	18	-	-	2.79	3.26	3.26	4.19	-	-	13.5 (3.5-16.0)	3.57 (0.7-4.41)	3.78
	12	14	18	18	-	-	2.61	3.05	3.92	3.92	-	-	13.5 (3.5-16.0)	3.56 (0.7-4.41)	3.79
	7	7	7	7	7	-	2.40	2.40	2.40	2.40	2.40	-	12.0 (3.5-12.7)	2.82 (0.7-3.44)	4.26
	7	7	7	7	9	-	2.33	2.33	2.33	2.33	2.98	-	12.3 (3.5-13.5)	3.03 (0.7-3.65)	4.06
	7	7	7	7	12	-	2.24	2.24	2.24	2.24	3.84	-	12.8 (3.5-14.5)	3.29 (0.7-3.98)	3.89
	7	7	7	7	14	-	2.20	2.20	2.20	2.20	4.40	-	13.2 (3.5-15.3)	3.40 (0.7-4.20)	3.88
	7	7	7	7	18	-	2.05	2.05	2.05	2.05	5.30	-	13.5 (3.5-16.0)	3.49 (0.7-4.41)	3.87
	7	7	7	7	24	-	1.82	1.82	1.82	1.82	6.22	-	13.5 (3.5-16.0)	3.47 (0.7-4.41)	3.89
	7	7	7	9	9	-	2.28	2.28	2.28	2.93	2.93	-	12.7 (3.5-14.2)	3.23 (0.7-3.87)	3.93
	7	7	7	9	12	-	2.20	2.20	2.20	2.83	3.77	-	13.2 (3.5-15.3)	3.40 (0.7-4.20)	3.88
	7	7	7	9	14	-	2.15	2.15	2.15	2.76	4.29	-	13.5 (3.5-16.0)	3.49 (0.7-4.41)	3.87
	7	7	7	9	18	-	1.97	1.97	1.97	2.53	5.06	-	13.5 (3.5-16.0)	3.48 (0.7-4.41)	3.88
	7	7	7	9	24	-	1.75	1.75	1.75	2.25	6.00	-	13.5 (3.5-16.0)	3.46 (0.7-4.41)	3.90
	7	7	7	12	12	-	2.10	2.10	2.10	3.60	3.60	-	13.5 (3.5-16.0)	3.49 (0.7-4.41)	3.87
	7	7	7	12	14	-	2.01	2.01	2.01	3.45	4.02	-	13.5 (3.5-16.0)	3.48 (0.7-4.41)	3.88
	7	7	7	12	18	-	1.85	1.85	1.85	3.18	4.77	-	13.5 (3.5-16.0)	3.47 (0.7-4.41)	3.89
	7	7	7	12	24	-	1.66	1.66	1.66	2.84	5.68	-	13.5 (3.5-16.0)	3.45 (0.7-4.41)	3.91
	7	7	7	14	14	-	1.93	1.93	1.93	3.86	3.86	-	13.5 (3.5-16.0)	3.48 (0.7-4.41)	3.88
	7	7	7	14	18	-	1.78	1.78	1.78	3.57	4.59	-	13.5 (3.5-16.0)	3.47 (0.7-4.41)	3.89
	7	7	7	14	24	-	1.60	1.60	1.60	3.20	5.50	-	13.5 (3.5-16.0)	3.45 (0.7-4.41)	3.91
	7	7	7	18	18	-	1.66	1.66	1.66	4.26	4.26	-	13.5 (3.5-16.0)	3.45 (0.7-4.41)	3.91
	7	7	9	9	9	-	2.22	2.22	2.85	2.85	2.85	-	13.0 (3.5-14.9)	3.34 (0.7-4.09)	3.89
	7	7	9	9	12	-	2.15	2.15	2.76	2.76	3.68	-	13.5 (3.5-16.0)	3.49 (0.7-4.41)	3.87
	7	7	9	9	14	-	2.05	2.05	2.64	2.64	4.12	-	13.5 (3.5-16.0)	3.49 (0.7-4.41)	3.87
	7	7	9	9	18	-	1.89	1.89	2.43	2.43	4.86	-	13.5 (3.5-16.0)	3.48 (0.7-4.41)	3.88
	7	7	9	9	24	-	1.69	1.69	2.17	2.17	5.78	-	13.5 (3.5-16.0)	3.46 (0.7-4.41)	3.90
	7	7	9	12	12	-	2.01	2.01	2.58	3.45	3.45	-	13.5 (3.5-16.0)	3.48 (0.7-4.41)	3.88
	7	7	9	12	14	-	1.93	1.93	2.48	3.31	3.85	-	13.5 (3.5-16.0)	3.48 (0.7-4.41)	3.88
	7	7	9	12	18	-	1.78	1.78	2.29	3.06	4.59	-	13.5 (3.5-16.0)	3.47 (0.7-4.41)	3.89
	7	7	9	12	24	-	1.60	1.60	2.06	2.75	5.49	-	13.5 (3.5-16.0)	3.45 (0.7-4.41)	3.91
	7	7	9	14	14	-	1.85	1.85	2.38	3.71	3.71	-	13.5 (3.5-16.0)	3.47 (0.7-4.41)	3.89
	7	7	9	14	18	-	1.72	1.72	2.21	3.44	4.41	-	13.5 (3.5-16.0)	3.46 (0.7-4.41)	3.90
	7	7	9	14	24	-	1.55	1.55	1.99	3.10	5.31	-	13.5 (3.5-16.0)	3.44 (0.7-4.41)	3.92
	7	7	9	18	18	-	1.60	1.60	2.06	4.12	4.12	-	13.5 (3.5-16.0)	3.45 (0.7-4.41)	3.91
	7	7	12	12	12	-	1.89	1.89	3.24	3.24	3.24	-	13.5 (3.5-16.0)	3.48 (0.7-4.41)	3.88
	7	7	12	12	14	-	1.82	1.82	3.12	3.12	3.62	-	13.5 (3.5-16.0)	3.47 (0.7-4.41)	3.89
	7	7	12	12	18	-	1.69	1.69	2.89	2.89	4.34	-	13.5 (3.5-16.0)	3.46 (0.7-4.41)	3.90
	7	7	12	12	24	-	1.52	1.52	2.61	2.61	5.24	-	13.5 (3.5-16.0)	3.44 (0.7-4.41)	3.92
	7	7	12	14	14	-	1.75	1.75	3.00	3.50	3.50	-	13.5 (3.5-16.0)	3.46 (0.7-4.41)	3.90
	7	7	12	14	18	-	1.63	1.63	2.79	3.26	4.19	-	13.5 (3.5-16.0)	3.45 (0.7-4.41)	3.91
	7	7	12	18	18	-	1.52	1.52	2.62	3.92	3.92	-	13.5 (3.5-16.0)	3.44 (0.7-4.41)	3.92
	7	7	14	14	14	-	1.68	1.68	3.38	3.38	3.38	-	13.5 (3.5-16.0)	3.46 (0.7-4.41)	3.90
	7	7	14	14	18	-	1.58	1.58	3.15	3.15	4.04	-	13.5 (3.5-16.0)	3.45 (0.7-4.41)	3.91
5-unit connection	7	9	9	9	9	-	2.18	2.78	2.78	2.78	2.78	-	13.3 (3.5-15.6)	3.44 (0.7-4.30)	3.87
	7	9	9	9	12	-	2.05	2.64	2.64	2.64	3.53	-	13.5 (3.5-16.0)	3.49 (0.7-4.41)	3.87
	7	9	9	9	14	-	1.97	2.53	2.53	2.53	3.96	-	13.5 (3.5-16.0)	3.48 (0.7-4.41)	3.88
	7	9	9	9	18	-	1.82	2.34	2.34	2.34	4.66	-	13.5 (3.5-16.0)	3.47 (0.7-4.41)	3.89
	7	9	9	9	24	-	1.63	2.09	2.09	2.09	5.60	-	13.5 (3.5-16.0)	3.45 (0.7-4.41)	3.91
	7	9	9	12	12	-	1.92	2.48	2.48	3.31	3.31	-	13.5 (3.5-16.0)	3.48 (0.7-4.41)	3.88
	7	9	9	12	14	-	1.85	2.38	2.38	3.18	3.71	-	13.5 (3.5-16.0)	3.47 (0.7-4.41)	3.89
	7	9	9	12	18	-	1.72	2.21	2.21	2.95	4.41	-	13.5 (3.5-16.0)	3.46 (0.7-4.41)	3.90
	7	9	9	12	24	-	1.55	1.99	1.99	2.66	5.31	-	13.5 (3.5-16.0)	3.44 (0.7-4.41)	3.92
	7	9	9	14	14	-	1.78	2.29	2.29	3.57	3.57	-	13.5 (3.5-16.0)	3.47 (0.7-4.41)	3.89
	7	9	9	14	18	-	1.66	2.13	2.13	3.32	4.26	-	13.5 (3.5-16.0)	3.45 (0.7-4.41)	3.91
	7	9	9	18	18	-	1.56	1.99	1.99	3.98	3.98	-	13.5 (3.5-16.0)	3.44 (0.7-4.41)	3.92
	7	9	12	12	12	-	1.82	2.32	3.12	3.12	3.12	-	13.5 (3.5-16.0)	3.47 (0.7-4.41)	3.89
	7	9	12	12	14	-	1.75	2.25	3.00	3.00	3.50	-	13.5 (3.5-16.0)	3.46 (0.7-4.41)	3.90
	7	9	12	12	18	-	1.63	2.09	2.79	2.79	4.20	-	13.5 (3.5-16.0)	3.45 (0.7-4.41)	3.91
	7	9	12	14	14	-	1.69	2.17	2.88	3.38	3.38	-	13.5 (3.5-16.0)	3.46 (0.7-4.41)	3.90
	7	9	12	14	18	-	1.58	2.03	2.70	3.15	4.04	-	13.5 (3.5-16.0)	3.45 (0.7-4.41)	3.91
	7	9	14	14	14	-	1.63	2.09	3.26	3.26	3.26	-	13.5 (3.5-16.0)	3.45 (0.7-4.41)	3.91
	7	9	14	14	18	-	1.52	1.96	3.05	3.05	3.92	-	13.5 (3.5-16.0)	3.44 (0.7-4.41)	3.92
	7	12	12	12	12	-	1.70	2.95	2.95	2.95	2.95	-	13.5 (3.5-16.0)	3.46 (0.7-4.41)	3.90
	7	12	12	12	14	-	1.66	2.84	2.84	2.84	3.32	-	13.5 (3.5-16.0)	3.45 (0.7-4.41)	3.91
	7	12	12	12	18	-	1.55	2.66	2.66	2.66	3.97	-	13.5 (3.5-16.0)	3.44 (0.7-4.41)	3.92
	7	12	12	14	14	-	1.60	2.75	2.75	3.20	3.20	-	13.5 (3.5-16.0)	3.45 (0.7-4.41)	3.91
	7	12	14	14	14	-	1.55	2.65	3.10	3.10	3.10	-	13.5 (3.5-16.0)	3.44 (0.7-4.41)	3.92
	9	9	9	9	9	-	2.70	2.70	2.70	2.70	2.70	-	13.5 (3.5-16.0)	3.49 (0.7-4.41)	3.87
	9	9	9	9	12	-	2.53	2.53	2.53	2.53	3.38	-	13.5 (3.5-16.0)	3.48 (0.7-4.41)	3.88
	9	9	9	9	14	-	2.43	2.43	2.43	2.43	3.78	-	13.5 (3.5-16.0)	3.48 (0.7-4.41)	3.88
	9	9	9	9	18	-	2.25	2.25	2.25	2.25	4.50	-	13.5 (3.5-16.0)	3.46 (0.7-4.41)	3.90
	9	9	9	9	24	-	2.03	2.03	2.03	2.03	5.38	-	13.5 (3.5-16.0)	3.45 (0.7-4.41)	3.91
	9	9	9	12	12	-	2.38	2.38	2.38	3.18	3.18	-	13.5 (3.5-16.0)	3.47 (0.7-4.41)	3.89
	9	9	9	12	14	-	2.29	2.29	2.29	3.06	3.57	-	13.5 (3.5-16.0)	3.47 (0.7-4.41)	3.89
	9	9	9	12	18	-	2.13	2.13	2.13	2.84	4.27	-	13.5 (3.5-16.0)	3.45 (0.7-4.41)	3.91
	9	9	9	14	14	-	2.21	2.21	2.21	3.44	3.44	-	13.5 (3.5-16.0)	3.46 (0.7-4.41)	3.90
	9	9	9	14	18	-	2.06	2.06	2.06	3.20	4.12	-	13.5 (3.5-16.0)	3.45 (0.7-4.41)	3.91
	9	9	12	12	12	-	2.25	2.25	3.00	3.00	3.00	-	13.5 (3.5-16.0)	3.46 (0.7-4.41)	3.90
	9	9	12	12	14	-	2.17	2.17	2.89	2.89	3.38	-	13.5 (3.5-16.0)	3.46 (0.7-4.41)	3.90
	9	9	12	12	18	-	2.03	2.03	2.70	2.70	4.04	-	13.5 (3.5-16.0)	3.45 (0.7-4.41)	3.91
	9	9	12	14	14	-	2.09	2.09	2.80	3.26	3.26	-	13.5 (3.5-16.0)	3.45 (0.7-4.41)	3.91
	9	9	12	14	18	-	1.96	1.96	2.61	3.05	3.92	-	13.5 (3.5-16.0)	3.44 (0.7-4.41)	3.92
	9	9	14	14	14	-	2.03	2.03	3.15	3.15	3.15	-	13.5 (3.5-16.0)	3.45 (0.7-4.41)	3.91
	9	12	12	12	12	-	2.14	2.84	2.84	2.84	2.84	-	13.5 (3.5-16.0)	3.45 (0.7-4.41)	3.91
	9	12	12	12	14	-	2.06	2.75	2.75	2.75	3.19	-	13.5 (3.5-16.0)	3.45 (0.7-4.41)	3.91
	9	12	12	14	14	-	1.98	2.66	2.66	3.10	3.10	-	13.5 (3.5-16.0)	3.44 (0.7-4.41)	3.92
	12	12	12	12	12	-	2.70	2.70	2.70	2.70	2.70	-	13.5 (3.5-16.0)	3.45 (0.7-4.41)	3.91
	12	12	12	12	14	-	2.61	2.61	2.61	2.61	3.06	-	13.5 (3.5-16.0)	3.44 (0.7-4.41)	3.92

Notes: •7: 7000 Btu/h/9: 9000 Btu/h/12: 12000 Btu/h/14: 14000 Btu/h/18: 18000 Btu/h/24: 24000 Btu/h models
•The above specifications apply when connected with a wall-mounted unit.
•2 or more indoor units should be connected.
•Heating capacity is determined based on 20°CDB (indoor temperature) and 7°CDB/6°CWB (outdoor temperature).
•Pipe Length: 5 m, Height difference: 0 m (Outdoor unit to Indoor unit)
•Total capacity of indoor units connected must be between 7.5 kW and 15.5 kW.

6-unit Multi-split heating

AOYG45LBLA6	Combination of Indoor Units						Heating Operation								
							Heating Capacity							Input Power (Min. - Max.)	COP
							Unit 1	Unit 2	Unit 3	Unit 4	Unit 5	Unit 6	Total Capacity (Min. - Max.)		
							kW	kW	kW	kW	kW	kW	kW	kW	
6-unit connection	7	7	7	7	7	7	2.20	2.20	2.20	2.20	2.20	2.20	13.2 (3.5-15.3)	3.28 (0.7-4.20)	4.02
	7	7	7	7	7	9	2.15	2.15	2.15	2.15	2.15	2.75	13.5 (3.5-16.0)	3.37 (0.7-4.41)	4.00
	7	7	7	7	7	12	2.01	2.01	2.01	2.01	2.01	3.45	13.5 (3.5-16.0)	3.37 (0.7-4.41)	4.00
	7	7	7	7	7	14	1.93	1.93	1.93	1.93	1.93	3.85	13.5 (3.5-16.0)	3.37 (0.7-4.41)	4.00
	7	7	7	7	7	18	1.78	1.78	1.78	1.78	1.78	4.60	13.5 (3.5-16.0)	3.37 (0.7-4.41)	4.00
	7	7	7	7	7	24	1.60	1.60	1.60	1.60	1.60	5.50	13.5 (3.5-16.0)	3.37 (0.7-4.41)	4.00
	7	7	7	7	9	9	2.05	2.05	2.05	2.05	2.65	2.65	13.5 (3.5-16.0)	3.37 (0.7-4.41)	4.00
	7	7	7	7	9	12	1.93	1.93	1.93	1.93	2.48	3.30	13.5 (3.5-16.0)	3.37 (0.7-4.41)	4.00
	7	7	7	7	9	14	1.85	1.85	1.85	1.85	2.38	3.72	13.5 (3.5-16.0)	3.37 (0.7-4.41)	4.00
	7	7	7	7	9	18	1.72	1.72	1.72	1.72	2.21	4.41	13.5 (3.5-16.0)	3.37 (0.7-4.41)	4.00
	7	7	7	7	9	24	1.55	1.55	1.55	1.55	1.99	5.31	13.5 (3.5-16.0)	3.37 (0.7-4.41)	4.00
	7	7	7	7	12	12	1.82	1.82	1.82	1.82	3.11	3.11	13.5 (3.5-16.0)	3.37 (0.7-4.41)	4.00
	7	7	7	7	12	14	1.75	1.75	1.75	1.75	3.00	3.50	13.5 (3.5-16.0)	3.37 (0.7-4.41)	4.00
	7	7	7	7	12	18	1.63	1.63	1.63	1.63	2.79	4.19	13.5 (3.5-16.0)	3.37 (0.7-4.41)	4.00
	7	7	7	7	14	14	1.69	1.69	1.69	1.69	3.37	3.37	13.5 (3.5-16.0)	3.37 (0.7-4.41)	4.00
	7	7	7	7	14	18	1.58	1.58	1.58	1.58	3.15	4.03	13.5 (3.5-16.0)	3.37 (0.7-4.41)	4.00
	7	7	7	9	9	9	1.97	1.97	1.97	2.53	2.53	2.53	13.5 (3.5-16.0)	3.37 (0.7-4.41)	4.00
	7	7	7	9	9	12	1.85	1.85	1.85	2.38	2.38	3.19	13.5 (3.5-16.0)	3.37 (0.7-4.41)	4.00
	7	7	7	9	9	14	1.78	1.78	1.78	2.29	2.29	3.58	13.5 (3.5-16.0)	3.37 (0.7-4.41)	4.00
	7	7	7	9	9	18	1.66	1.66	1.66	2.13	2.13	4.26	13.5 (3.5-16.0)	3.37 (0.7-4.41)	4.00
	7	7	7	9	12	12	1.75	1.75	1.75	2.25	3.00	3.00	13.5 (3.5-16.0)	3.37 (0.7-4.41)	4.00
	7	7	7	9	12	14	1.69	1.69	1.69	2.17	2.89	3.37	13.5 (3.5-16.0)	3.37 (0.7-4.41)	4.00
	7	7	7	9	12	18	1.58	1.58	1.58	2.03	2.70	4.03	13.5 (3.5-16.0)	3.37 (0.7-4.41)	4.00
	7	7	7	9	14	14	1.63	1.63	1.63	2.09	3.26	3.26	13.5 (3.5-16.0)	3.37 (0.7-4.41)	4.00
	7	7	7	12	12	12	1.66	1.66	1.66	2.84	2.84	2.84	13.5 (3.5-16.0)	3.37 (0.7-4.41)	4.00
	7	7	7	12	12	14	1.60	1.60	1.60	2.75	2.75	3.20	13.5 (3.5-16.0)	3.37 (0.7-4.41)	4.00
	7	7	7	12	14	14	1.55	1.55	1.55	2.65	3.10	3.10	13.5 (3.5-16.0)	3.37 (0.7-4.41)	4.00
	7	7	9	9	9	9	1.89	1.89	2.43	2.43	2.43	2.43	13.5 (3.5-16.0)	3.37 (0.7-4.41)	4.00
	7	7	9	9	9	12	1.78	1.78	2.29	2.29	2.29	3.07	13.5 (3.5-16.0)	3.37 (0.7-4.41)	4.00
	7	7	9	9	9	14	1.72	1.72	2.21	2.21	2.21	3.43	13.5 (3.5-16.0)	3.37 (0.7-4.41)	4.00
	7	7	9	9	9	18	1.60	1.60	2.06	2.06	2.06	4.12	13.5 (3.5-16.0)	3.37 (0.7-4.41)	4.00
	7	7	9	9	12	12	1.69	1.69	2.17	2.17	2.89	2.89	13.5 (3.5-16.0)	3.37 (0.7-4.41)	4.00
	7	7	9	9	12	14	1.63	1.63	2.09	2.09	2.79	3.27	13.5 (3.5-16.0)	3.37 (0.7-4.41)	4.00
	7	7	9	9	12	18	1.52	1.52	1.96	1.96	2.61	3.93	13.5 (3.5-16.0)	3.37 (0.7-4.41)	4.00
	7	7	9	9	14	14	1.58	1.58	2.03	2.03	3.14	3.14	13.5 (3.5-16.0)	3.37 (0.7-4.41)	4.00
	7	7	9	12	12	12	1.60	1.60	2.05	2.75	2.75	2.75	13.5 (3.5-16.0)	3.37 (0.7-4.41)	4.00
	7	7	9	12	12	14	1.55	1.55	1.99	2.66	2.66	3.09	13.5 (3.5-16.0)	3.37 (0.7-4.41)	4.00
	7	7	12	12	12	12	1.53	1.53	2.61	2.61	2.61	2.61	13.5 (3.5-16.0)	3.37 (0.7-4.41)	4.00
	7	9	9	9	9	9	1.80	2.34	2.34	2.34	2.34	2.34	13.5 (3.5-16.0)	3.37 (0.7-4.41)	4.00
	7	9	9	9	9	12	1.72	2.21	2.21	2.21	2.21	2.94	13.5 (3.5-16.0)	3.37 (0.7-4.41)	4.00
	7	9	9	9	9	14	1.66	2.13	2.13	2.13	2.13	3.32	13.5 (3.5-16.0)	3.37 (0.7-4.41)	4.00
	7	9	9	9	12	12	1.65	2.09	2.09	2.09	2.79	2.79	13.5 (3.5-16.0)	3.37 (0.7-4.41)	4.00
	7	9	9	9	12	14	1.58	2.03	2.03	2.03	2.69	3.14	13.5 (3.5-16.0)	3.37 (0.7-4.41)	4.00
	7	9	9	12	12	12	1.54	1.99	1.99	2.66	2.66	2.66	13.5 (3.5-16.0)	3.37 (0.7-4.41)	4.00
	9	9	9	9	9	9	2.25	2.25	2.25	2.25	2.25	2.25	13.5 (3.5-16.0)	3.37 (0.7-4.41)	4.00
	9	9	9	9	9	12	2.13	2.13	2.13	2.13	2.13	2.85	13.5 (3.5-16.0)	3.37 (0.7-4.41)	4.00
	9	9	9	9	12	12	2.03	2.03	2.03	2.03	2.69	2.69	13.5 (3.5-16.0)	3.37 (0.7-4.41)	4.00

Notes: •7: 7000 Btu/h/9: 9000 Btu/h/12: 12000 Btu/h/14: 14000 Btu/h/18: 18000 Btu/h/24: 24000 Btu/h models
•The above specifications apply when connected with a wall-mounted unit.
•2 or more indoor units should be connected.
•Heating capacity is determined based on 20°CDB (indoor temperature) and 7°CDB/6°CWB (outdoor temperature).
•Pipe Length: 5 m, Height difference: 0 m (Outdoor unit to Indoor unit)
•Total capacity of indoor units connected must be between 7.5 kW and 15.5 kW.

Feature Summary

Type		Wall-mounted type							Cassette		Cassette		Duct						Floor		Floor/Ceiling	Ceiling	
Series		Designer Series		Standard Series		Designer Series	Standard Series		Compact 4-way Flow Grid type Series		Compact 4-way Flow Series	4-way Flow Series	Mini (With drain pump)		Slim (With drain pump)		Medium Static Pressure						
Model name		ASYG 07/09/12/14 KGTF ASYG 07/09/12/14 KGTE	ASYG 07/09/12/14 KETF, KETF-B, KETE, KETE-B	ASYG 07/09/12/14 KMCF ASYG 07/09/12/14 KMCE	ASYG 18/22/24 KMTE	ASYG 07/09/12/14 LUCA	ASYG 07/09/12/14 LMCE	ASYG18LFCA, ASYG24LFCC	AUXG 07/09/12/ 14/18/22/24 KVLA		AUYG 07/09LVLA, AUYG 12/14/18LVLB, AUYG 22/24LVLA	AUYG 30/36LRLE, AUYG 36/45LRLA	ARXG 07/09/ 12/14/18 KSLAP	ARYG 07/09/ 12/14/18 LSLAP	ARXG 07/09/ 12/14/18 KLLAP	ARYG 07/09LLTA, ARYG 12/14/18 LLTB	ARXG22KMLB, ARXG24KMLA	ARYG 24/36/45 LMLA, ARYG 30/36LMLE	AGYG 09/12/14 KVCA	AGYG 09/12/14 LVCA	ABYG 14/22/24 LVTA, ABYG18LVTB	ABYG 18/22KRTA	ABYG 30/36LRTE, ABYG 36/45LRTA
Refrigerant		R32	R32	R32	R32	R410A			R32		R410A		R32	R410A	R32	R410A	R32	R410A	R32	R410A		R32	R410A
Energy-saving Features	Save Occupancy sensor	●																					
	Economy operation	●	●	●	●	●	●	●	●		●	●	●	●	●	●	●	●	●	●	●	●	●
	Setting temperature range limitation	○	○	○	○	○	○	○	○		○	○	●	●	○	○	○	○	○	○	○	●	○
	Set temperature auto return	○	○	○	○	○	○	○	●		○	○	●	●	●	○	●	○	○	○	○	●	○
Features for Comfort	Power diffuser						●	●															
	Powerful operation	●	●	●	●														●				
	10°C Heat	●	●	●	●	●	●	●	●		●	○	○	○	○	○	○	○	●	●	●	○	●
	Outdoor unit low noise operation	●	●	●	●													○ (45) (36LMLA)	●			○	○ (45/54)(36LRTA)
	Auto changeover	●	●	●	●	●	●	●	●		●	●	●	●	●	●	●	●	●	●	●	●	●
	UP/DOWN swing louver	●	●	●		●	●		●		●	●	○	○	○	○			●	●		●	
	Double swing automatic				●			●													●		●
	Automatic fan speed	●	●	●	●	●	●	●	●		●	●	●	●	●	●	●	●	●	●	●	●	●
	Auto restart	●	●	●	●	●	●	●	●		●	●	●	●	●	●	●	●	●	●	●	●	●
	Connectable fresh air duct										○	●					●	●				●	●
	Fresh air intake								○		○	○			○	○	○	○				○	○
	Connectable distributing duct																●	●					
Convenience Features	Auto-off timer	○	○	○	○	○	○	○	●		○	○	●	●	●	○	●	○	○	○	○	●	○
	Sleep timer	●	●	●	●	●	●	●	●		●	○	○	○	○	○	○	○	●	●	●	○	●
	Program timer	●	●	●	●	●	●	●	●		●	○	○	○	○	○	○	○	●	●	●	○	●
	Weekly timer	●	●	○	●	●			●				●	●	●		●		●			●	
	Weekly & Temperature setback timer	○	○	○	○	○	○	○	○		○	●			●	●	●	●		○	○		○
	Filter sign	●	●	●	●	●	●	●	●		●	●	●	●	●	●	●	●	●	●	●	●	●
	External error output	○	○	○	○	○	○	○					○	○					○			○	
	External ON/OFF input	○	○	○	○	○	○	○	●		○	○	●	●	●	○	●	○	○	○	○	●	○
	Wireless LAN control	●	●	●	○	○	○	○	○		○	○	○	○	○	○	○	○	○	○	○	○	○
Clean Features	Ion deodorization filter	●	●	●	●	●	●	●											●	●			
	Apple-catechin filter	●	●	●	●	●	●	●											●	●			
	Long-life filter																○	○	●	●			
	Washable panel	●	●	●	●		●	●															
	Silver Ion Filter	○	○	○	○	○	○	○	○		○	○	○	○	○	○	○	○	○	○			
Installation	Drain pump as standard								●		●	●	●	●	●	●	○	○				○	○
	Blue fin							● (30)				● (45/54)						● (45)				● (30/36/45/54)	● (45)

○ : Optional function