

TIMBER WINDOW SECTION A-A AS PROPOSED 1:10

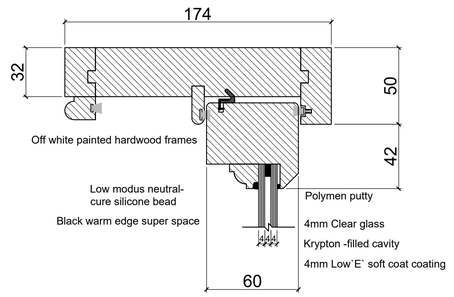

HEAD DETAIL (A) AS PROPOSED 1:2

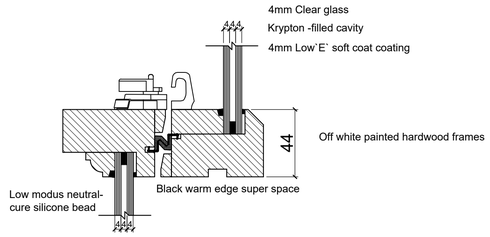

MEETING RAIL DETAIL (B) AS PROPOSED 1:2

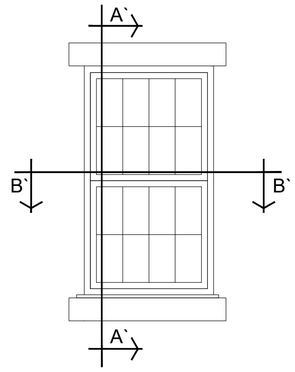

WINDOW ELEVATION AS PROPOSED

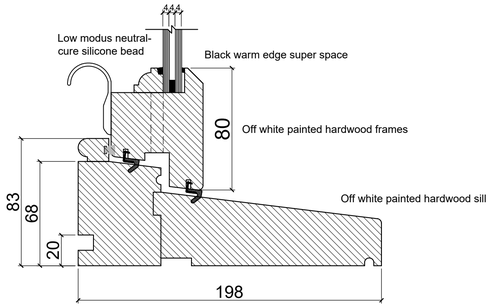

CILL DETAIL (C) AS PROPOSED 1:2

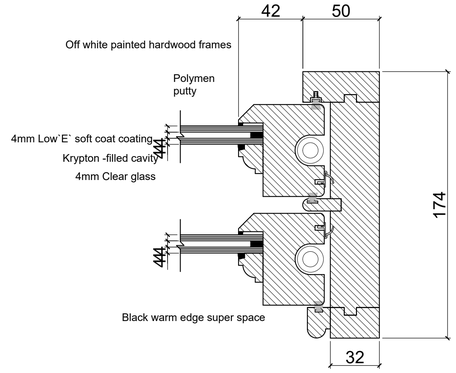

OPEN JAMB DETAIL (D) AS PROPOSED 1:2

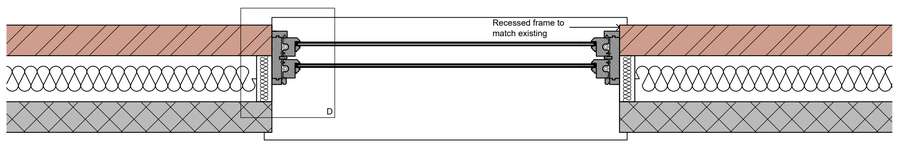

OPEN WINDOW TIMBER SECTION B-B AS PROPOSED 1:10

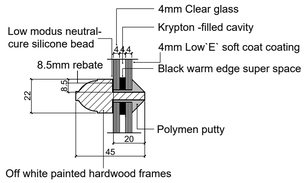

GLAZING BAR DETAIL AS PROPOSED 1:2

Listed building consent application

Copyright retained in accordance with the copyright, design, and patents act 1988.

DO NOT SCALE OFF DRAWINGS
Dimensions to be checked on site.

CDM Regulations 2015

Denotes a significant hazard or difficult management procedure. Please refer to drawing notes for potential hazards. Main contractor to plan for mitigation measures in response to hazards.

CDM Regulations require that **all** projects are to:

- **Have workers to be competent and are suitably skilled for the work they carry out;**
- **Contractors to provide appropriate supervision, instruction and information to all on site workers to provide a safe working environment;**
- **Have a written construction phase plan.**

Worcester architects are appointed as `Designer` only, unless a written appointment has been completed for the formal appointment as `Principal Designer`

Rev	Note	Date

wa worcester architects
19 Poyser Lane Kirk Langley Ashbourne
DE6 4LR 07963780532 01332 824517
info@worcester-architects.co.uk
www.worcester-architects.co.uk

RIBA Chartered Practice

Project	**29 Ashbourne Road, Kirk Langley, Ashbourne**
Drawing Title	**Timber Sash window details as proposed**
Scale	1:50/10
Sheet	A1
Drawn By	PA
Checked By	MS
Date	July`23
Job No.	079 2019
Drawing No.	016
Revision	-