BH-PROJ-003 - Projecting sign - Externally Illuminated (Heritage)

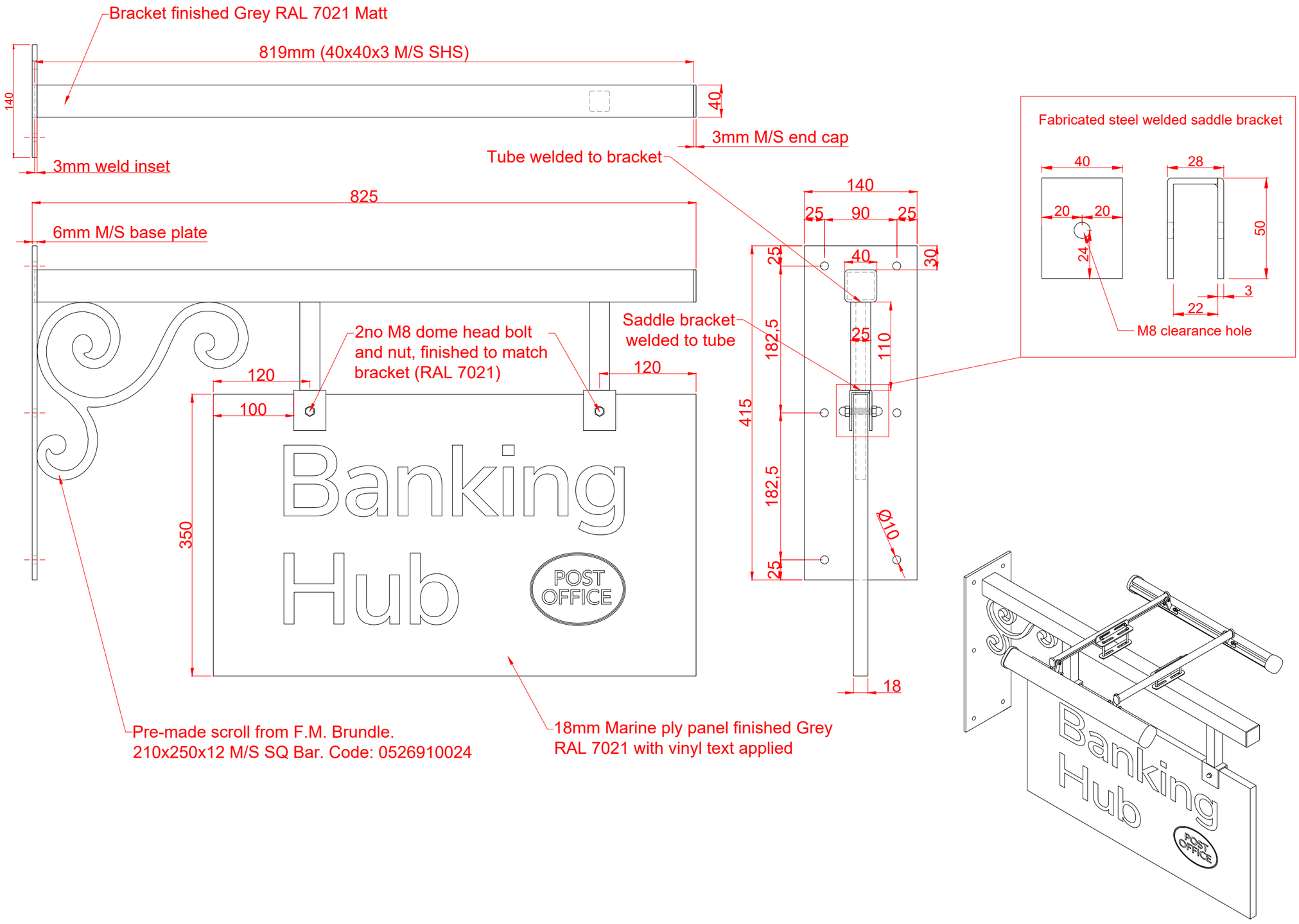

CLIENT	POST OFFICE
PROJECT	BANKING HUB
PRODUCT	Projector (Heritage, illuminated)
DRG NO.	PO030922_SM03
ORIG DATE	03/09/22
DATE	
DRAWN BY	SM
SCALE	DNS
ISSUE	A

REVISIONS

NOTES

NOT APPROVED

BH-PROJ-003 - Projecting sign - Externally Illuminated (Heritage)

Trough Light

Nanolight LED trough lights. IP66, 140 lumens per watt, 47mmx64 mm aluminium profile. Finished RAL 9005 Matt
Include with 560/700 top cantilever bracket for illuminated opt ions
Futurama Code: Trough_NanoLight

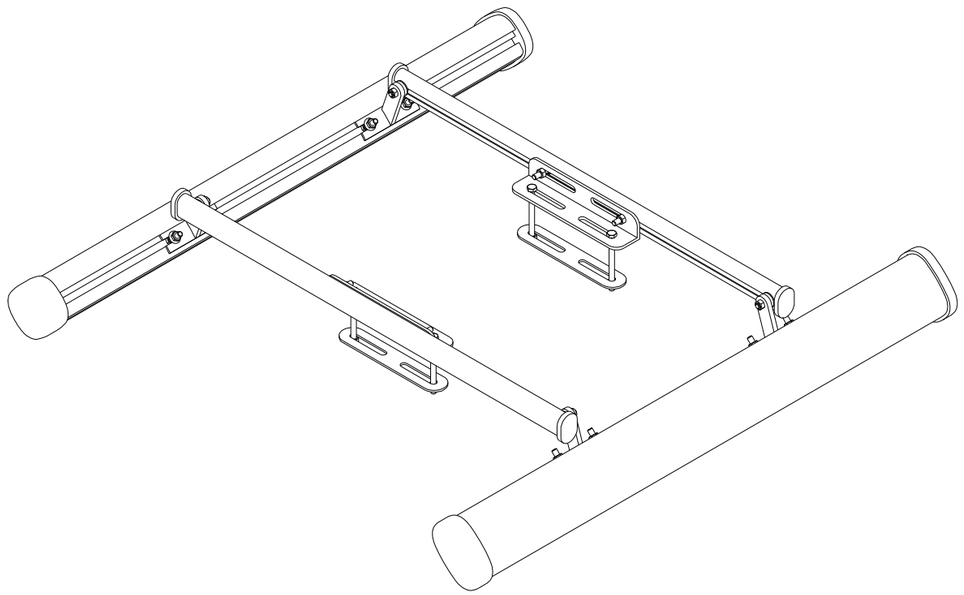

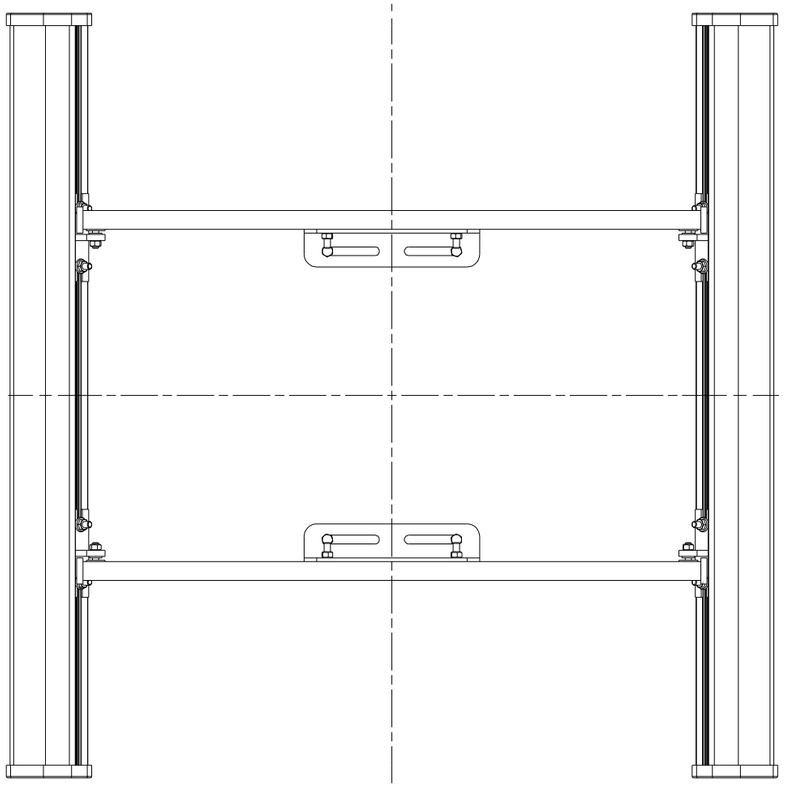

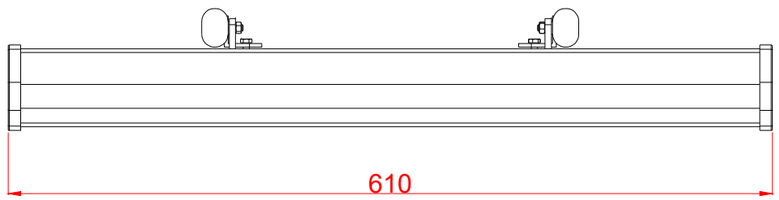

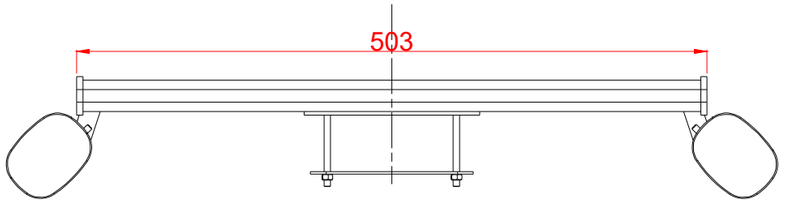

CLIENT	POST OFFICE
PROJECT	BANKING HUB
PRODUCT	Projector (Heritage, illuminated)
DRG NO.	PO030922_SM03
ORIG DATE	03/09/22
DATE	
DRAWN BY	SM
SCALE	DNS
ISSUE	A

REVISIONS

NOTES

NOT APPROVED