DRAWING LEGEND:
ANP210723A **initial draw**

PHILLIPS JOINERY LIMITED

# Phillips Joinery Limited


Joinery Manufacturers

Airfield Industrial Estate, Ashbourne, Derbyshire DE6 1HA

Telephone: (01335) 343614 Fax: (01335) 300674

website: www.phillipsjoinery.co.uk email: sales@phillipsjoinery.co.uk
drawing office: ( OPTION 3 ) email: mike.phillips@phillipsjoinery.co.uk


| | |
|---|---|
| DATED: | 21.07.2023 |
| CLIENT: | Littleover Builders |
| SITE: | Belper Youth & Community |
| DRAWING NUMBER: | ANP210723A |

**Date:**
**Drawing approved by:**

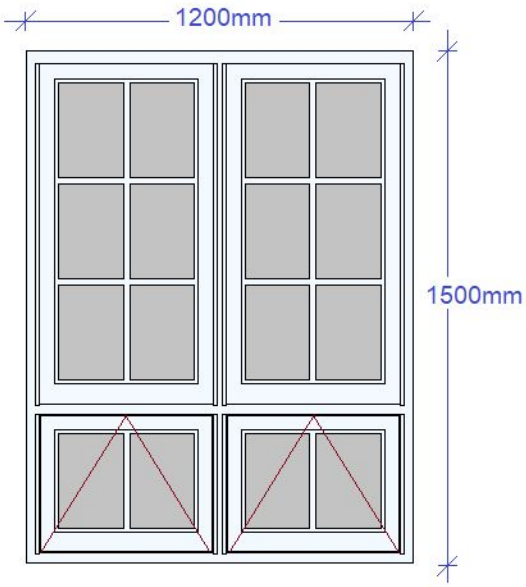


TIMBER INSET CASEMENT WINDOWS
IRONMONGERY TBC
TOP HUNG LOWER CASEMENTS
SUPPLY ONLY
PRE-GLAZED TBC
FINISH TBC



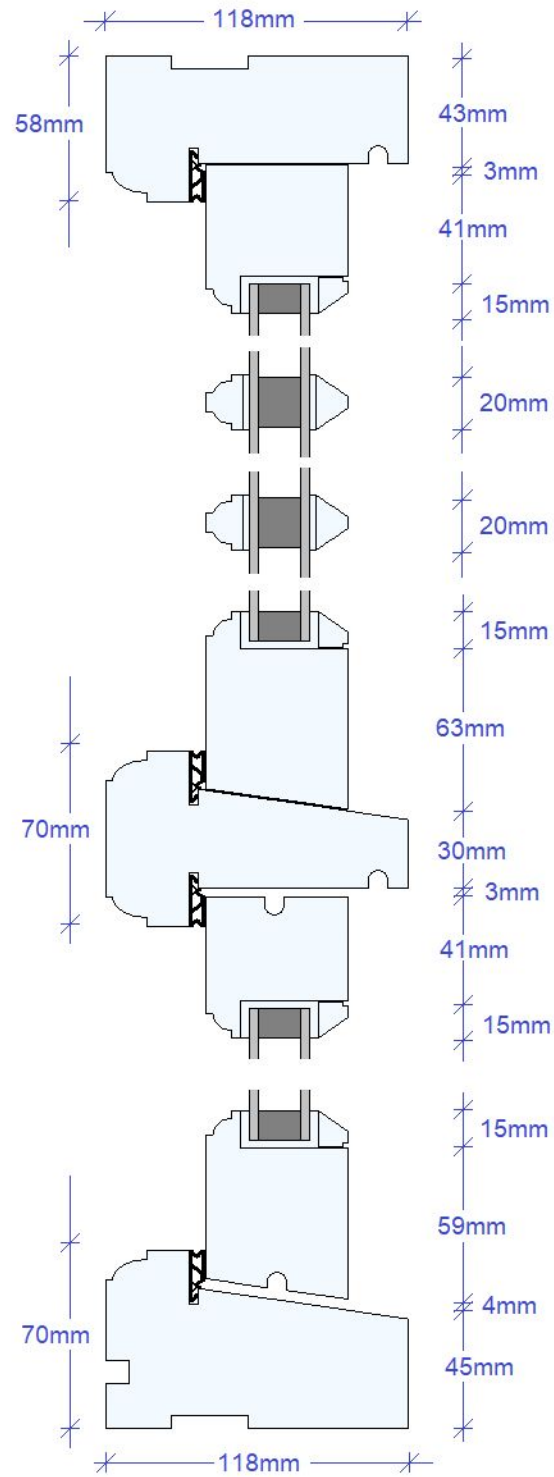


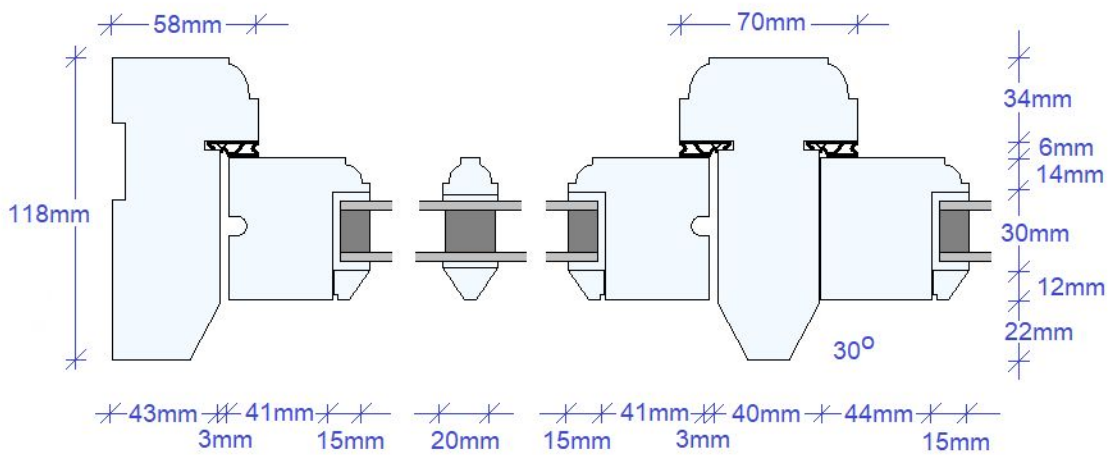


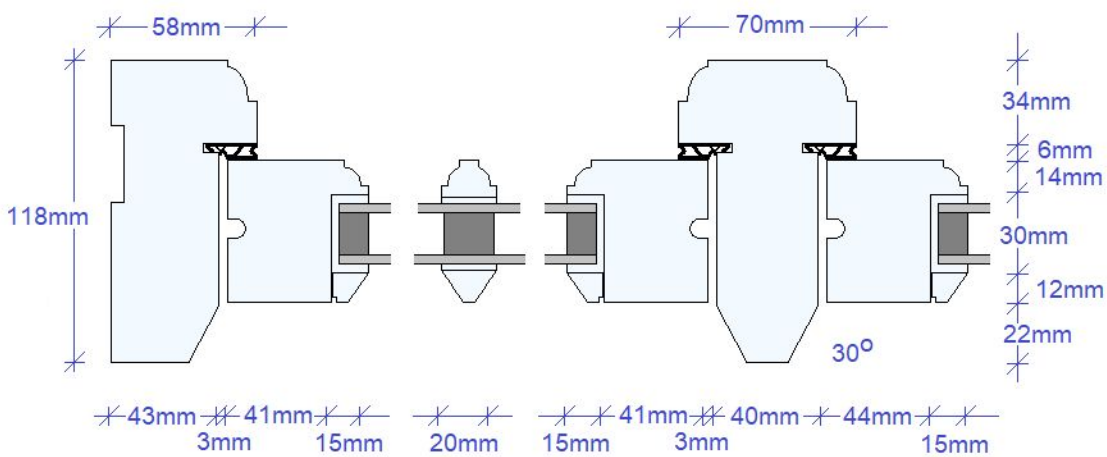


4mm Planitherm Total Plus Glass
16mm Warm Edge Spacer, Argon Filled
4mm Annealed Glass Outer
Clear unless otherwise stated