BH-PROJ-001 - Projecting Sign - Non-Illuminated

Fabricated steel frame and wall bracket with 2 tray covers with fret cut logo and letters with backed up white 040 opal acrylic (with printed vinyl logo)

Frame and Face panels to be powder coated Grey RAL 7021 30% gloss.

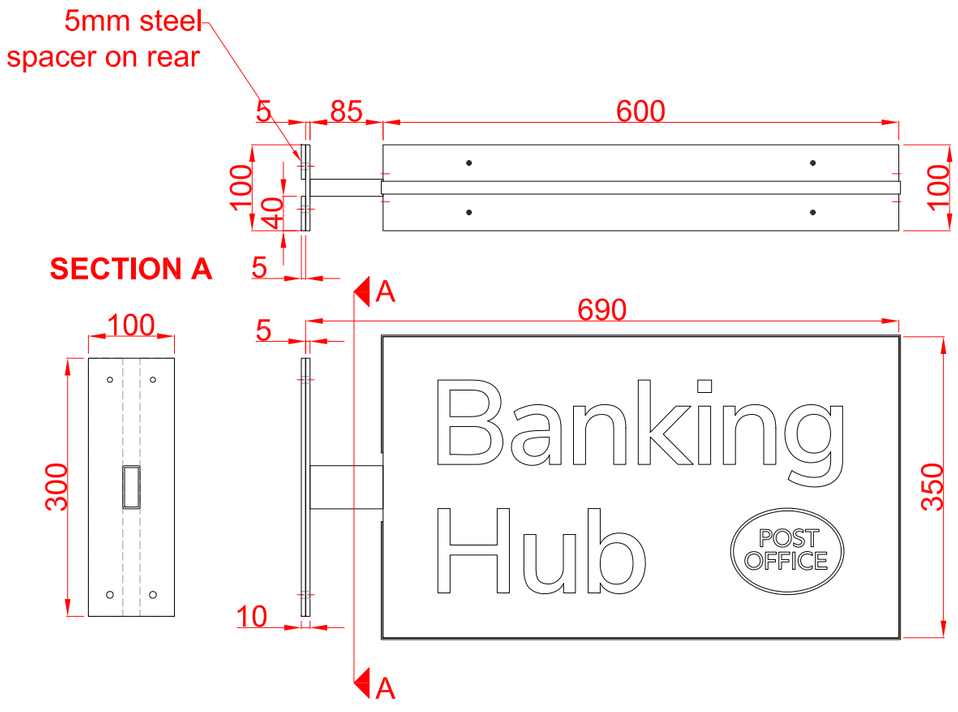

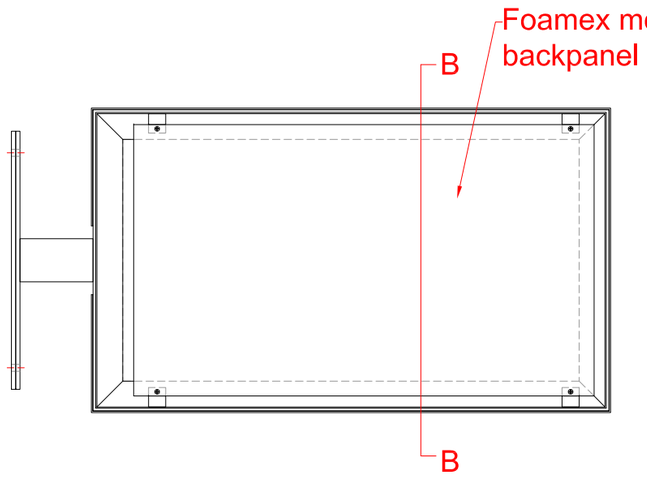

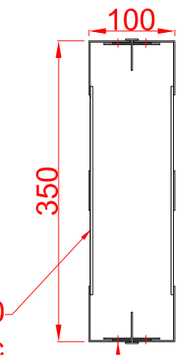

CLIENT	POST OFFICE
PROJECT	BANKING HUB
PRODUCT	NON-Illuminated Projector
DRG NO.	PO140323_SM02
ORIG DATE	14/03/23
DATE	
DRAWN BY	SM
SCALE	DNS
ISSUE	A

REVISIONS

NOTES

NOT APPROVED