ITEM NO.	PART NUMBER	QTY.
1	CYSH-PREM-SIDE ASS	2
2	CYSH-PREM-ROOF PURLIN 3000 ASS	4
3	POLYCARB 2167 X 1500	2
4	POLYCARB 1955 X 1850 CURVE	2
5	POLYCARB 1530 X 1500	2
6	CYSH-PREM-REAR LEG ASS	1
7	CYSH-PREM-PURLIN 1425 ASS	6
8	FLAT 50MM X 3MM	1
9	CYSR-SHEFF-48-850-715-4	1

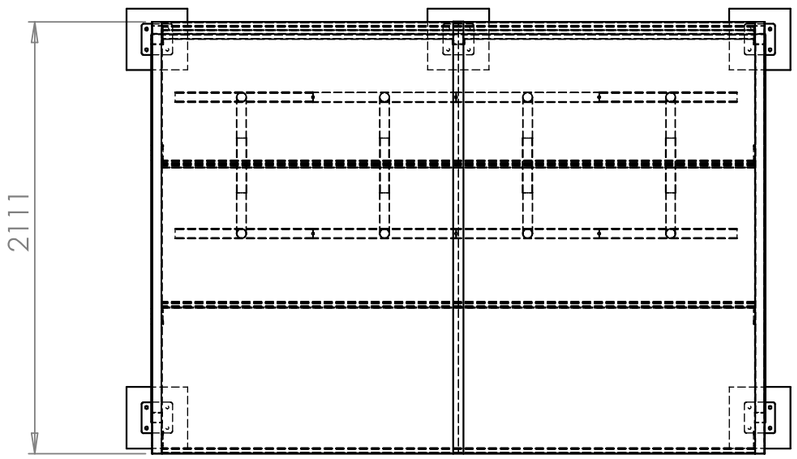

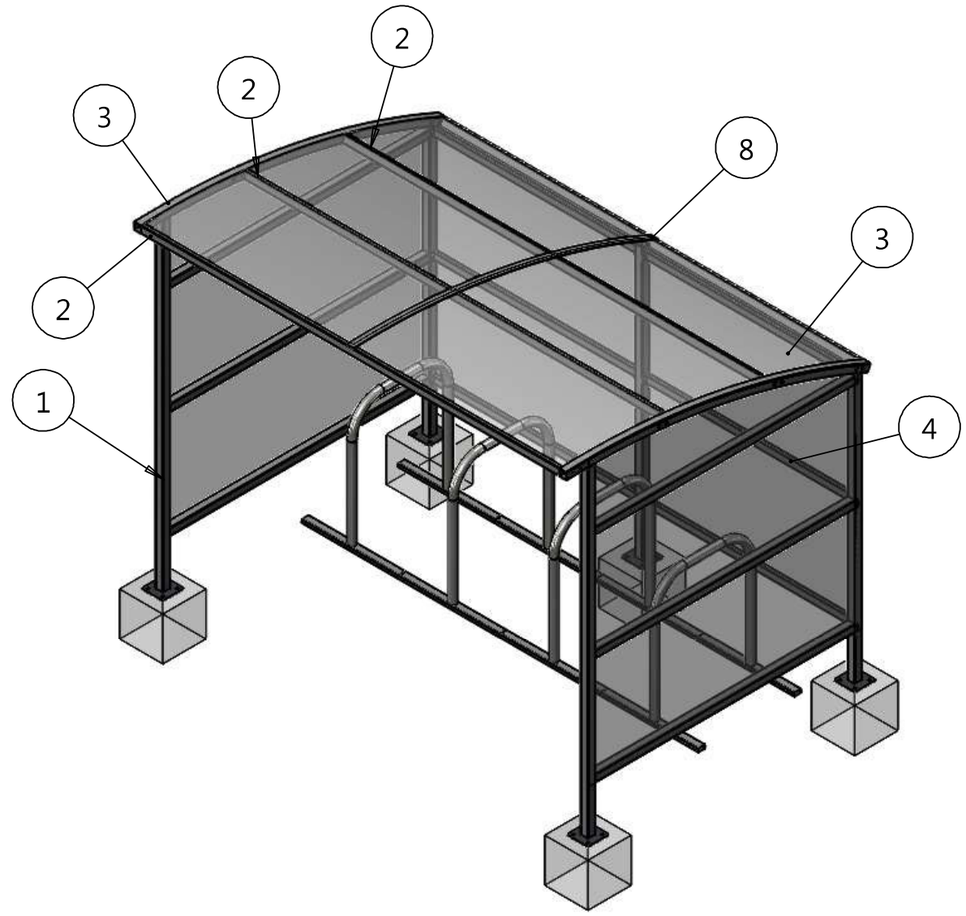

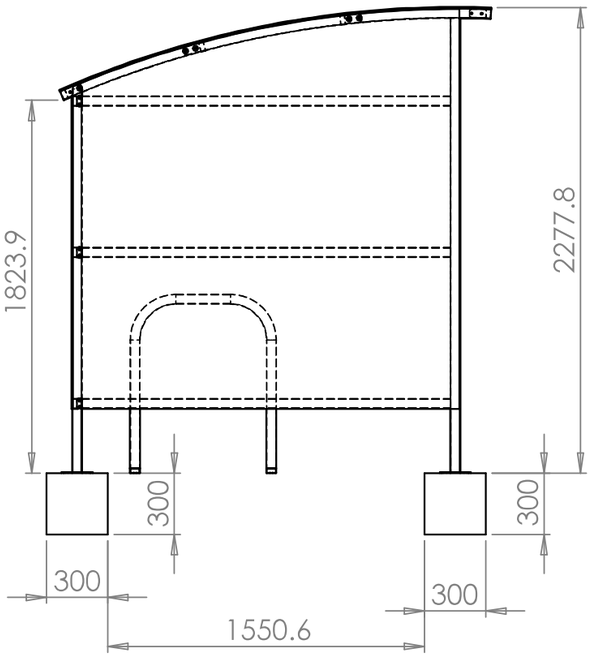

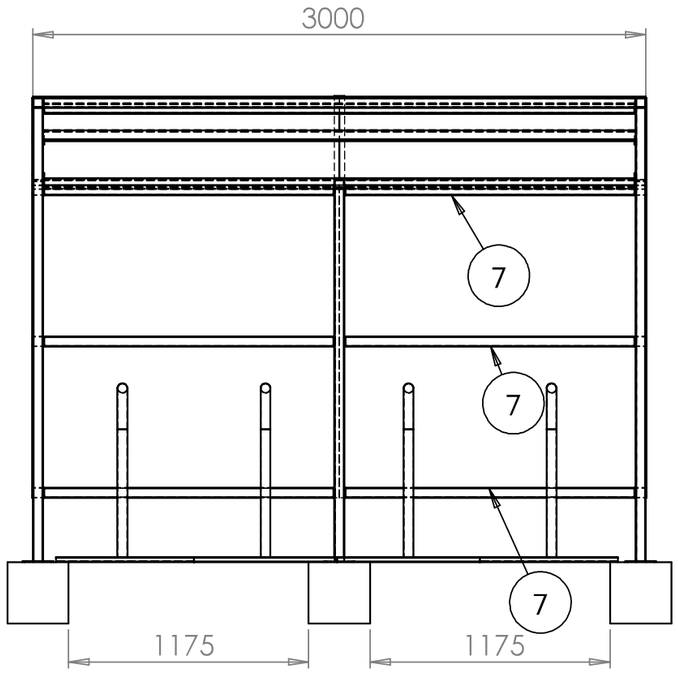

DEBURR AND BREAK SHARP EDGES

DO NOT SCALE DRAWING

UNLESS OTHERWISE SPECIFIED: DIMENSIONS ARE IN MILLIMETERS TOLERANCES: LINEAR:+-1MM ANGULAR:+-1DEG

DRAWN: CAB | DATE: 25/07/19 | REVISION: A

Metal Design

TITLE: PREMIER SHELTER BASEPLATED

DWG NO. **CYSH-PREM-2250 X 3000 X 2100**

FINISH: SEE JOB SHEET | SCALE: 1:30 | A3

MATERIAL: SEE B.O.M | SHEET 1 OF 4