Heritage Statement to Accompany Proposal for Upgraded Windows 40 Bridge Street, Belper, Derbyshire

Introduction/The Heritage Asset

The property is on Bridge Street in a Heritage Conservation Area. Our understanding is that the property was built circa 1880s. Please see **Illustration 1** and **Illustration 2** below for location plan and site plan.

The proposal and its impact

Proposal

To upgrade the front facing windows on the ground and first floor from wooden single glazed to wooden double glazed.

There is one sash window on the first floor, all other windows are casement.

In keeping with the fabric of the property, the upgraded double-glazed windows would be in a flush traditional heritage style wood and will be in keeping with the previous window style (i.e., like-for-like replacement).

Quality of life factors necessitating window upgrade:

1. **Cost of living crisis**. The property was built c1880s and is cold and drafty. Whilst a number of insulation works have been carried out on the property, it is extremely difficult to keep warm for a young family due to the current single glazed windows being the main source of heat loss in the house. Energy costs have risen to unprecedented levels[1], significantly increasing the financial burden to heat the property sufficiently in winter.
2. **Road noise from the A6**. Lorries, along with cars and motorbikes illegally breaking the speed limit, are creating a tremendous amount of noise in the property. In addition, many motorbikes are producing an illegal level of noise from removing the exhaust baffle[2]. There are no traffic calming measures, visible police action or other reduction measures in place on Bridge Street to counter this. High traffic noise has been documented to cause health effects in adults and children[3][4].

[1] What is the energy price cap and how high could bills go? - BBC News
[2] UK Motorcycle Exhaust Laws and Regulations [2022] Begin Motorcycling (begin-motorcycling.co.uk)
[3] https://www.theguardian.com/environment/2022/jun/02/traffic-noise-slows-childrens-memory-development-study-finds
[4] https://www.theguardian.com/society/2021/sep/09/transport-noise-linked-to-increased-risk-of-dementia-study-finds

3. **Traffic pollution can ingress into the property** because of the condition of the windows. If the windows were upgraded, this would mitigate this. Road pollution have a documented impact on health in adults and children[5][6].

Window Materials:

The existing and proposed upgraded window materials are set out below.

Existing windows materials and finishes:

Wooden single glazed windows on ground and first floor at front of property. White frame in black surround.

Proposed upgraded materials and finishes:

Traditional flush heritage style wood double glazed windows on ground and first floor at front of property in like-for-like match of previous style.

White frame to fit in black surround to match existing colour. Please refer **Illustrations 3-7** for current windows photos and **pages 9-15** for the upgraded windows drawings.

Impact

Our proposal has no impact on the fabric of the building and no harm caused to the heritage of Bridge Street.

[5] https://ukdataservice.ac.uk/case-study/road-pollution-and-childrens-respiratory-health/
[6] https://www.london.gov.uk/what-we-do/environment/pollution-and-air-quality/health-and-exposure-pollution

Illustrations

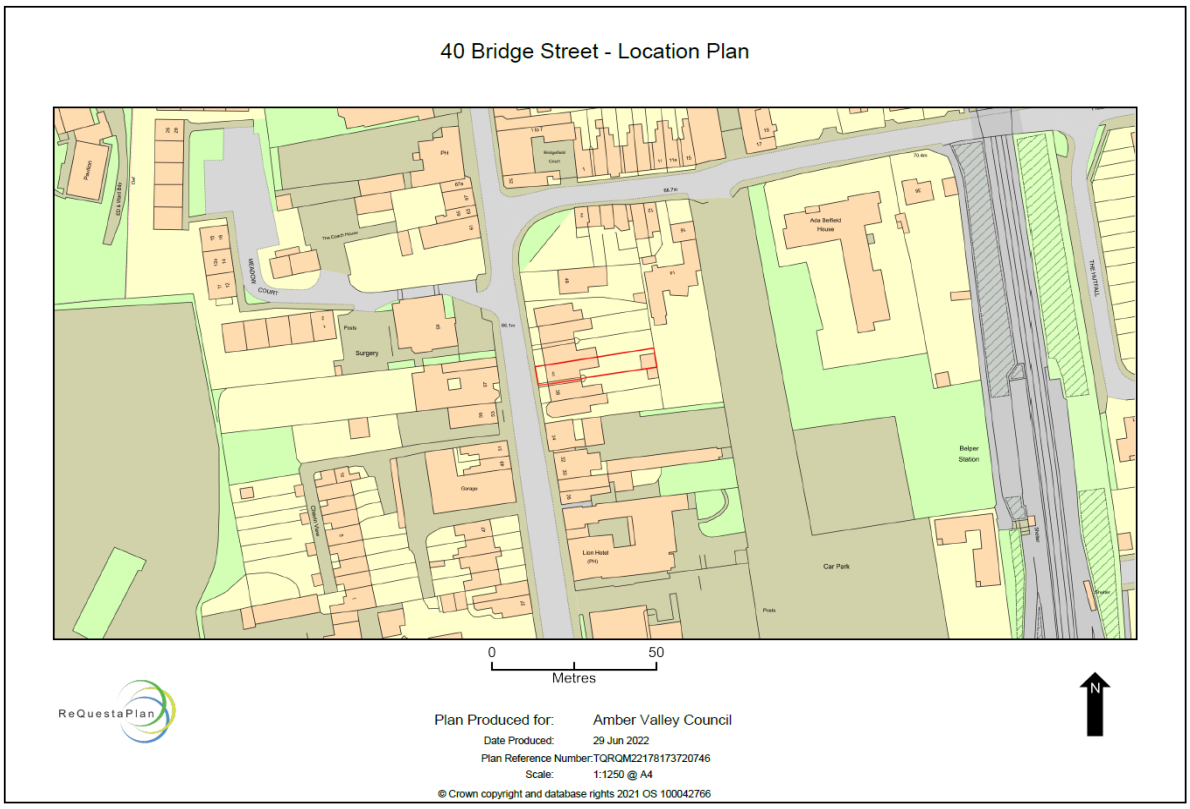

Illustration 1. Location plan



Illustration 2. Site plan



Illustration 3. Demonstrating Ground Floor Bay Window, First floor Casement Window (right), and Sash Window (left).



Illustration 4. Ground floor Bay Window



Illustration 5. Ground floor Bay Side (left, facing the property)



Illustration 6. Ground floor Bay Side (right, facing the property)



Illustration 7. First floor Casement window (right) and Sash window (left)

Upgraded Windows Drawings - Elevations

Ground floor Bay Window (1 of 2)

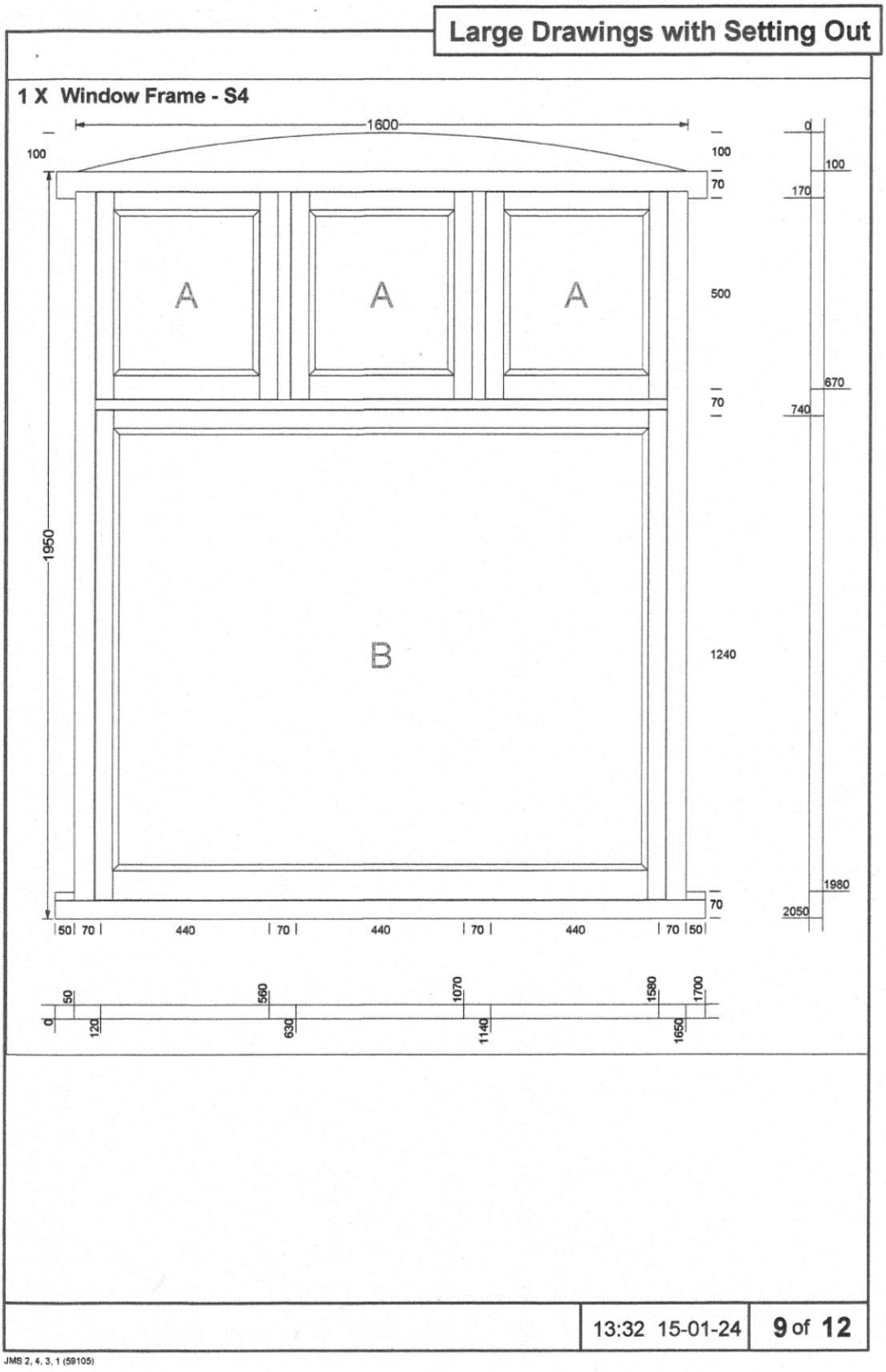

Ground floor Bay Window (2 of 2)

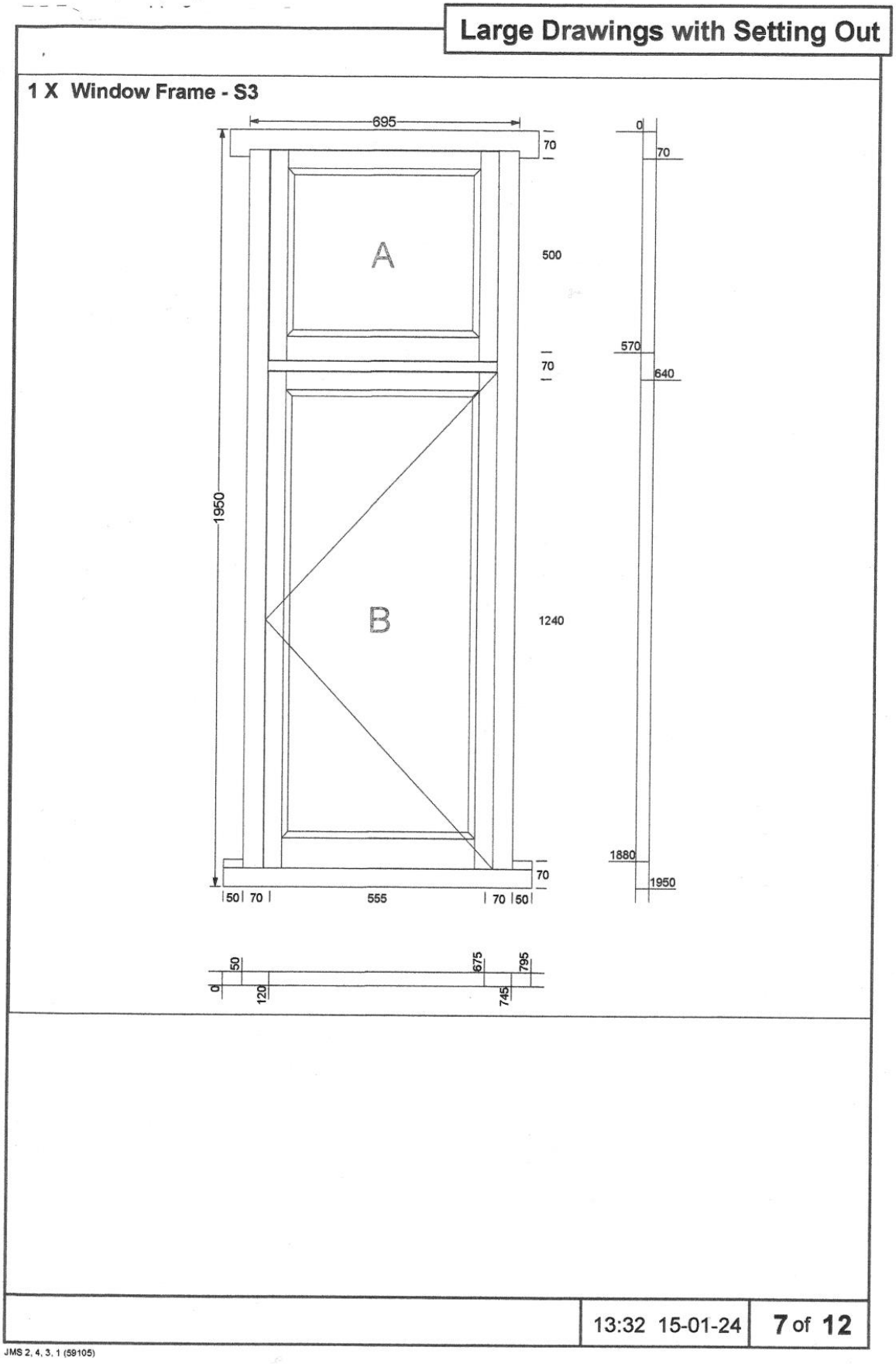

First floor Bedroom 1 Casement Window

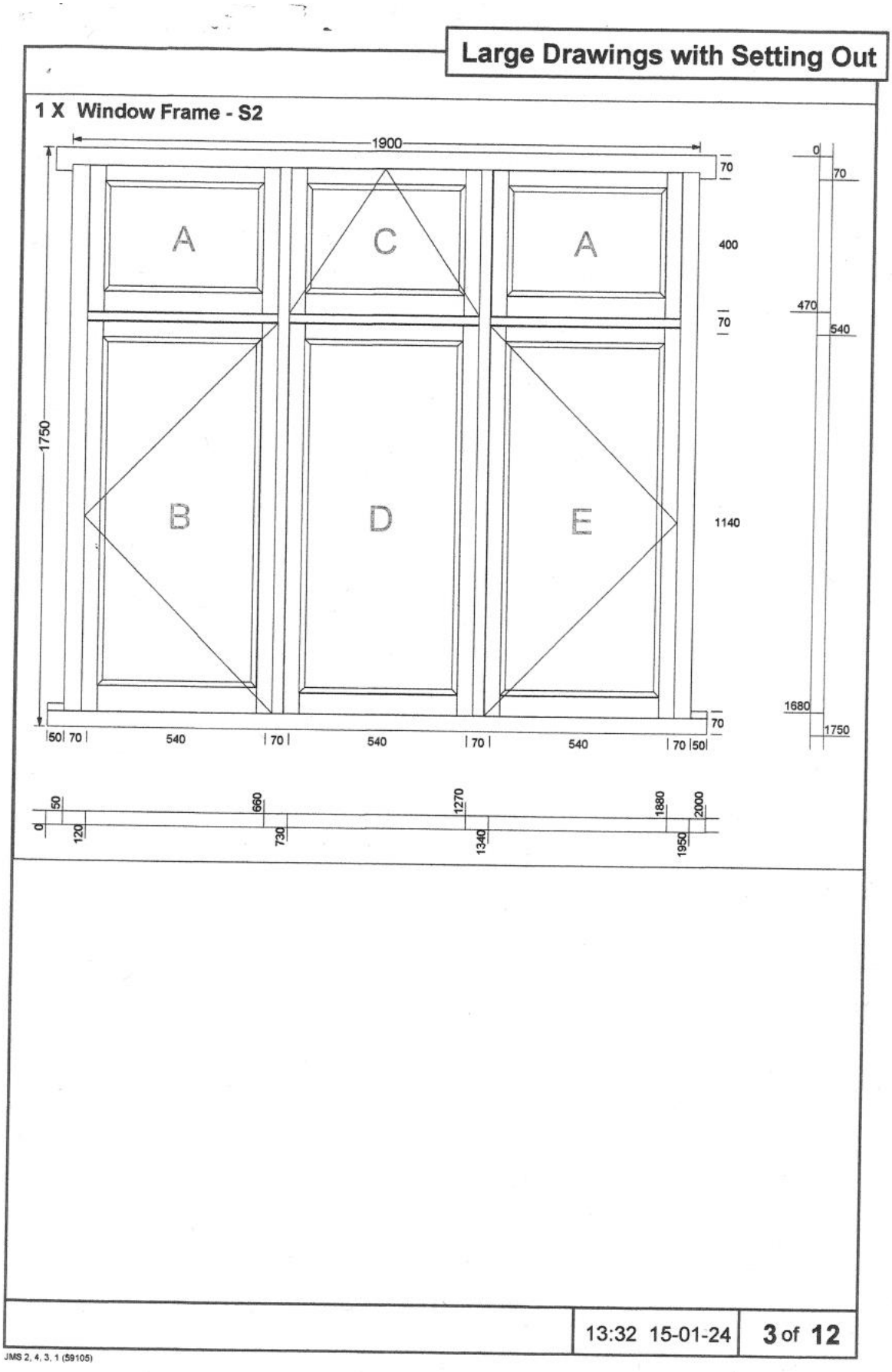

First floor Bedroom 2 Sash Window

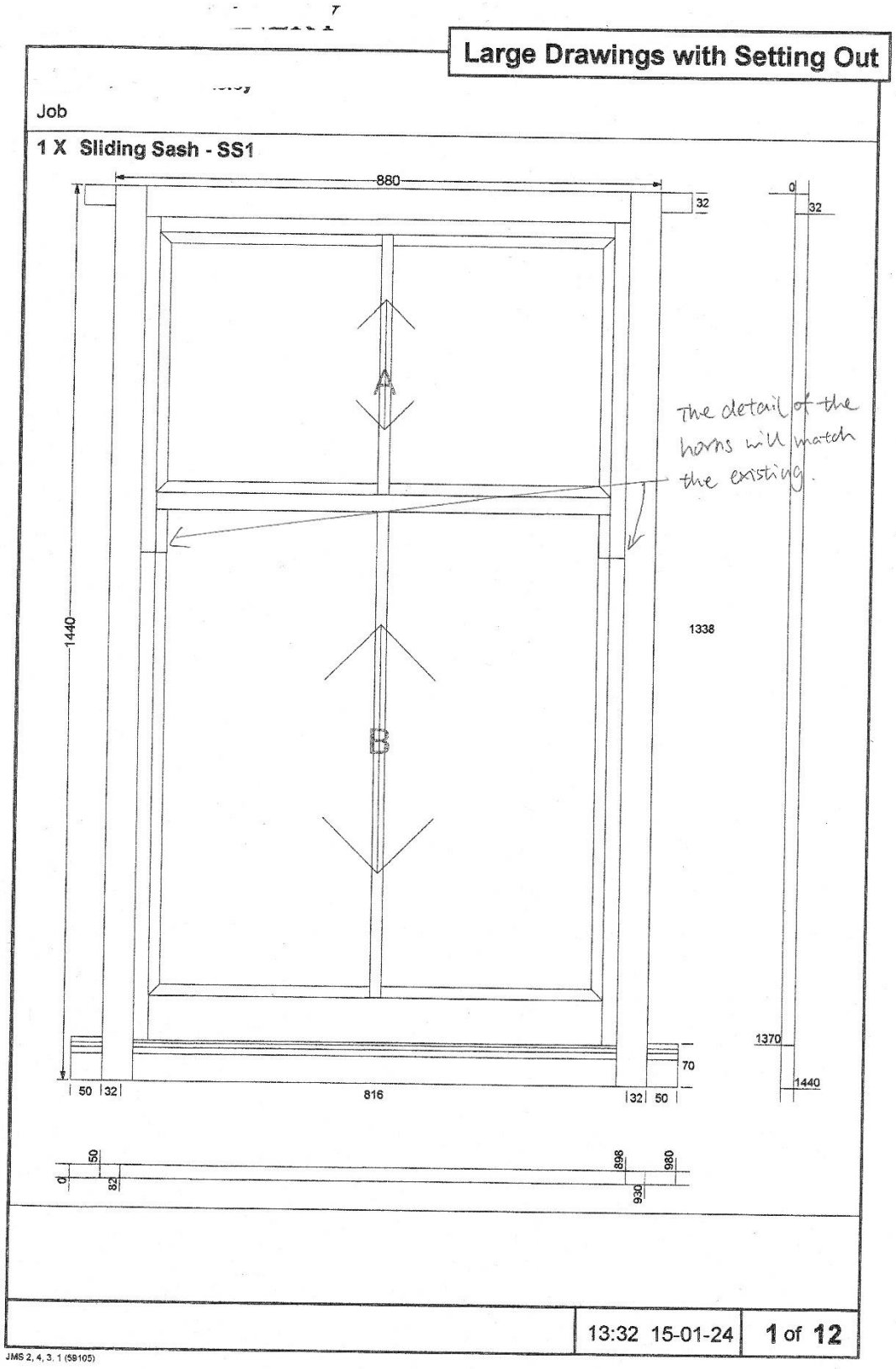

Upgraded Windows Drawings – Sections

Side Section of Casement

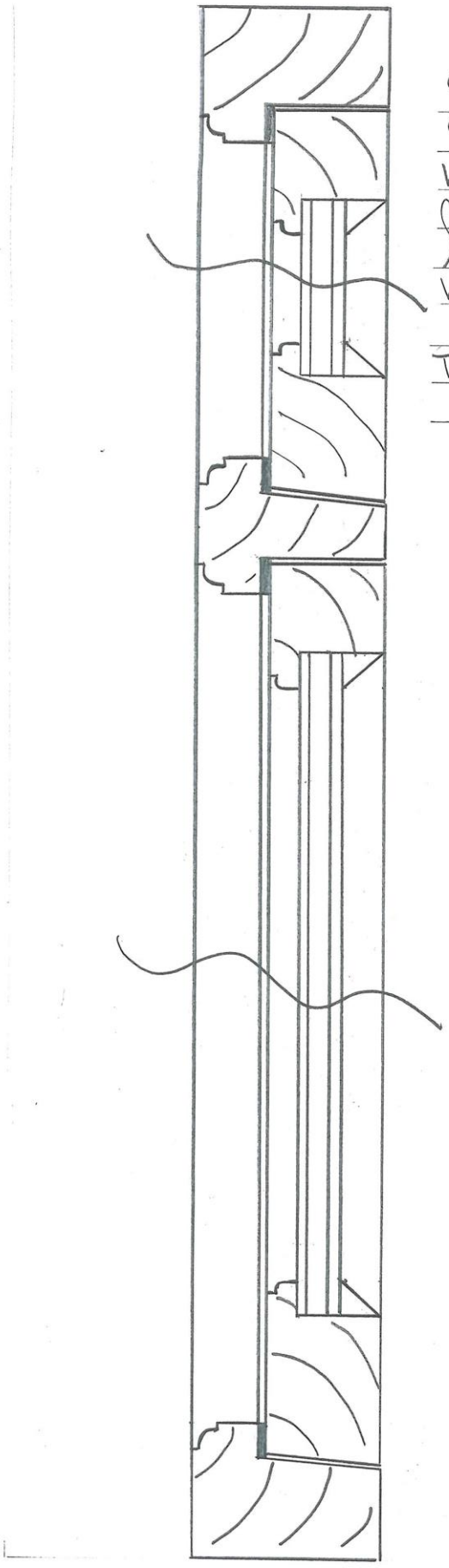

Scale 1:2

Side Section showing the head, cill and transom of the frame

Also Sections of the casements, head and bottom rails.

Traditional mortice + tenon joints.

Side section of Sash

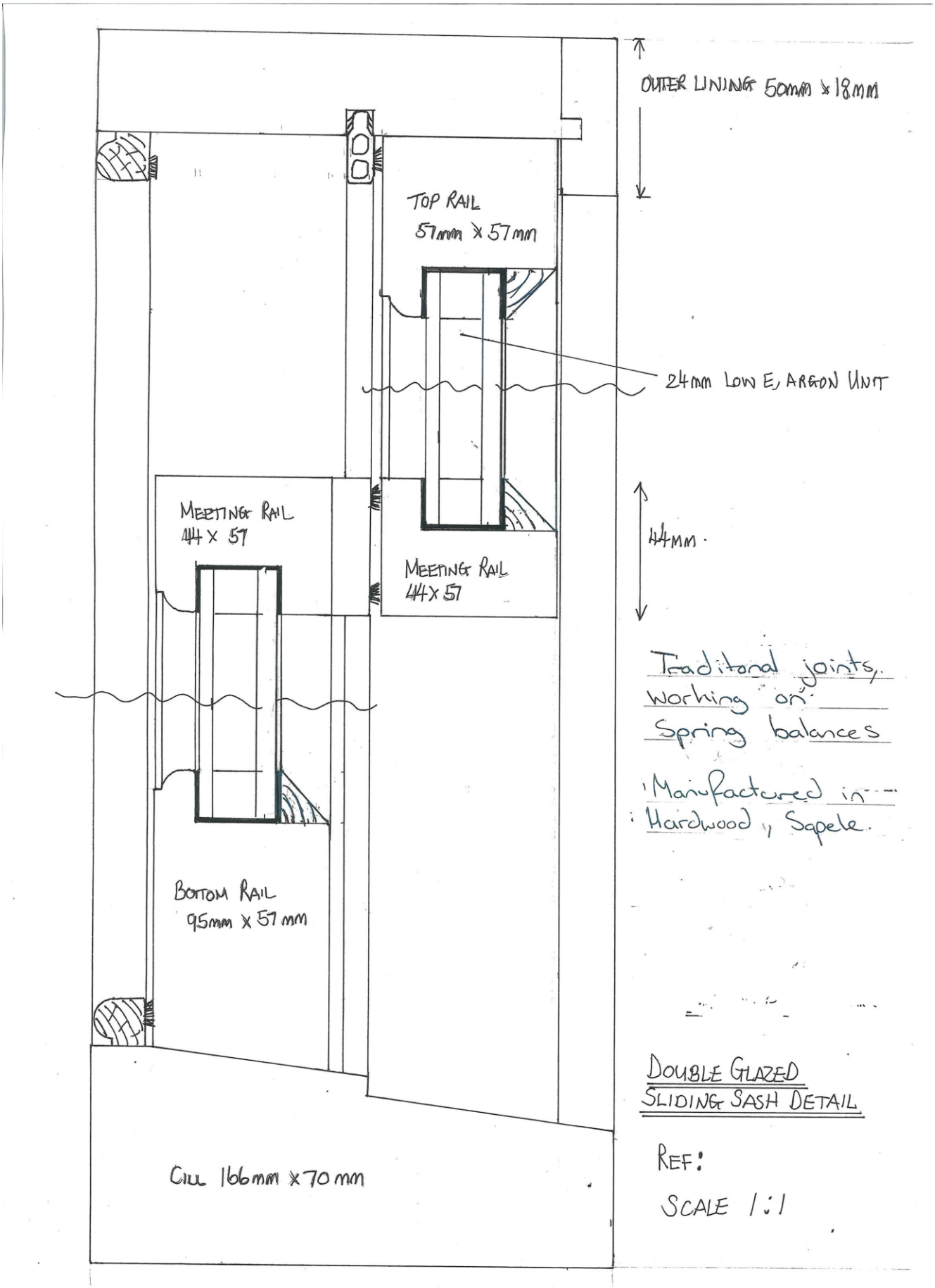

Scale 1:1

Section down through the head Showing Jamb, Mullion + Sash Section

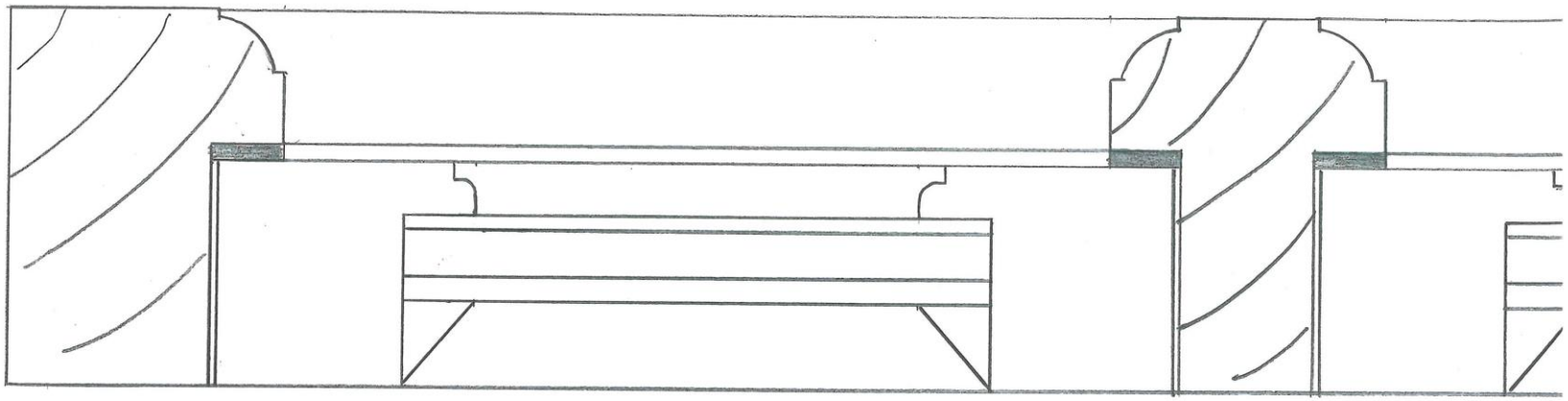

Flush casement
Traditional mortice + tenon Joints
Hung on traditional butt hinges with traditional Stays + fasteners
Double Glazed with 24mm units, 6.4 acoustic glass, 12mm cavity, 4mm float.
Manufactured in Hardwood, Sapele.