VIEW FROM SPIGOT SIDE

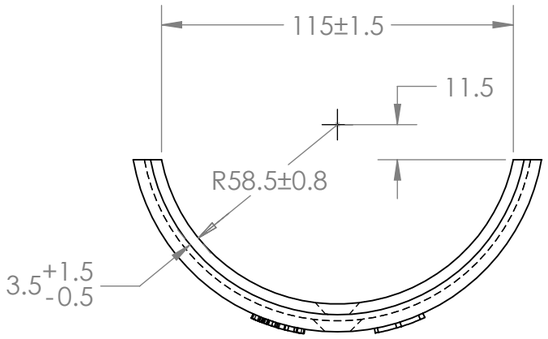

SECTION A-A

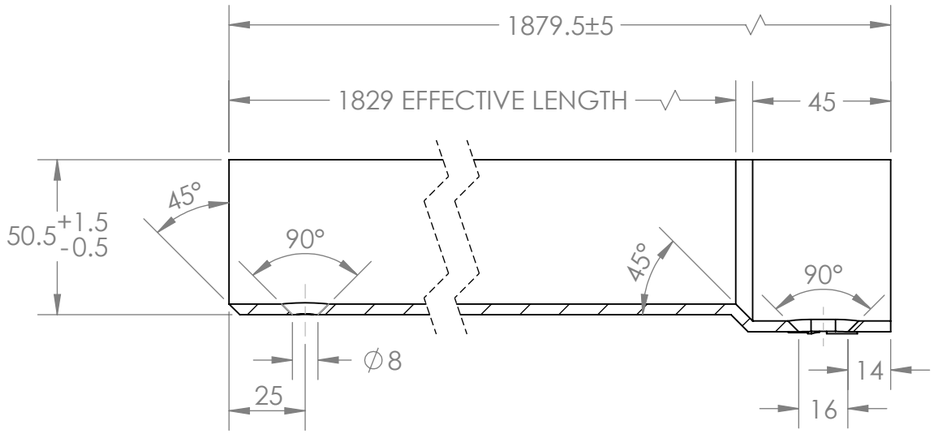

VIEW FROM SOCKET SIDE

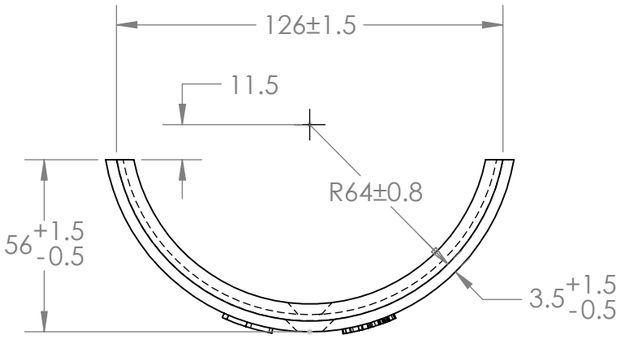

VIEW FROM UNDERSIDE

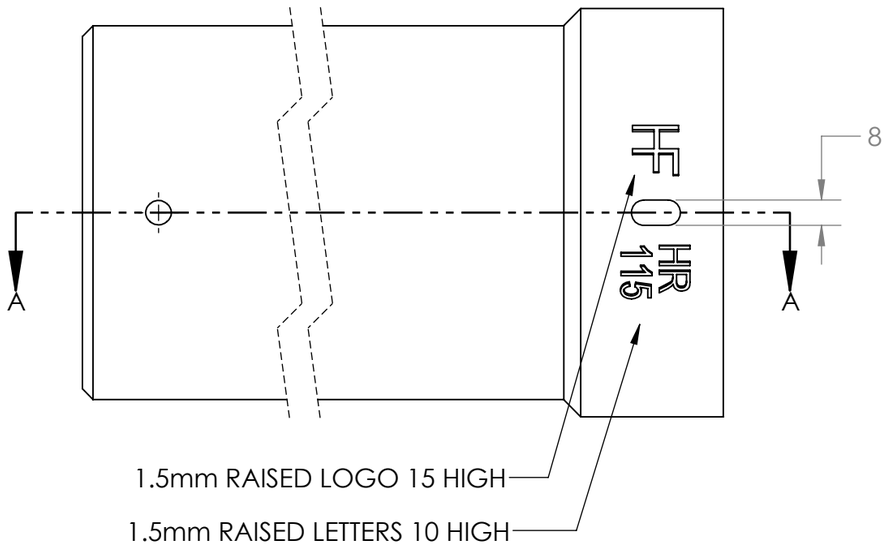

1) GUTTER TO BE STRAIGHT - MAX PERMITTED BOW 2.5mm/metre.

2) EXCESSIVE UNDULATION NOT ACCEPTABLE ON GUTTER EDGES.

3) COLD LAPS OR THROUGH HOLES NOT PERMITTED.

4) GUTTER SURFACE TO BE CLEAN AND FREE OF CONTAMINENTS OR RUST PRIOR TO PAINTING.

5) IT IS ESSENTIAL THAT THE SOCKET AND SPIGOT ENDS FOR BOTH GUTTERS AND FITTINGS ARE CHECKED FOR COMPATIBILITY THROUGH A RECORDED QUALITY SYSTEM BEFORE LEAVING THE MANUFACTURER.

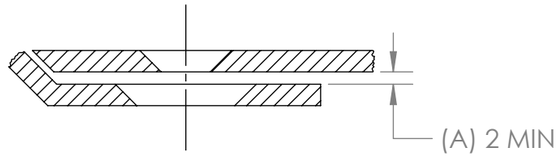

IMPORTANT:
THE ANNULI (A) 2.0 MIN. BETWEEN SOCKET AND SPIGOT JOINT IS CRITICAL FOR THE PERFORMANCE OF THE JOINT.

ALL MARKINGS TO BE 8MM MIN CLEAR OF SLOT TO ALLOW ROOM FOR FIXINGS

ALL DIMS IN mm

UNCONTROLLED COPY

WATER LANE
SOUTH PARADE
HALIFAX
WEST YORKSHIRE
HX3 9HG

TEL: (44) 01422 330607
FAX: (44) 01422 320349
E-MAIL info@hargreavesfoundry.co.uk

Hargreaves Foundry Group

TITLE: 115mm Half Round Gutter 6ft			
MATERIAL: BSEN 1561 Grade:EN-GJL-150			
SCALE: 1:2 A3	DRAWN: S Clarke	CHECKED: P Gill	
DATE: 02/05/24	REF No: –	REV: 3	
DWG No: HR4501			

Copyright and Design right
This confidential drawing is the sole property of Hargreaves Foundry Group Companies and must not be reproduced or distributed to any third party withoutwritten permission. It must only be used for the purpose for which it has been issued and may be withdrawn upon request. The validity of the drawing is only guaranteed at the time of issue and is subject to change without notice.