FOR ALL UNSPECIFIED DIMENSIONS SEE DRAWING: HR4501

VIEW FROM ABOVE

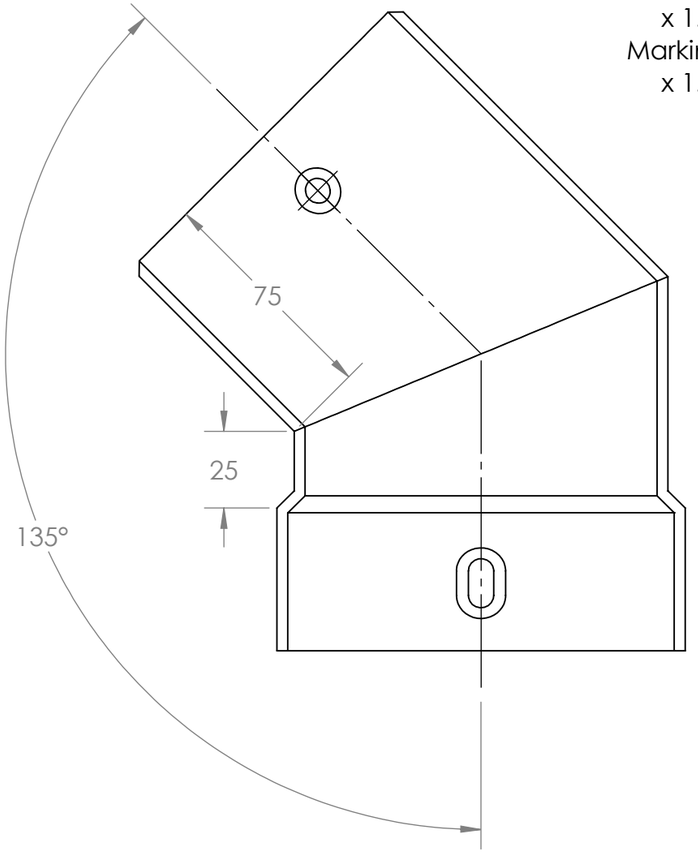

VIEW FROM UNDERSIDE

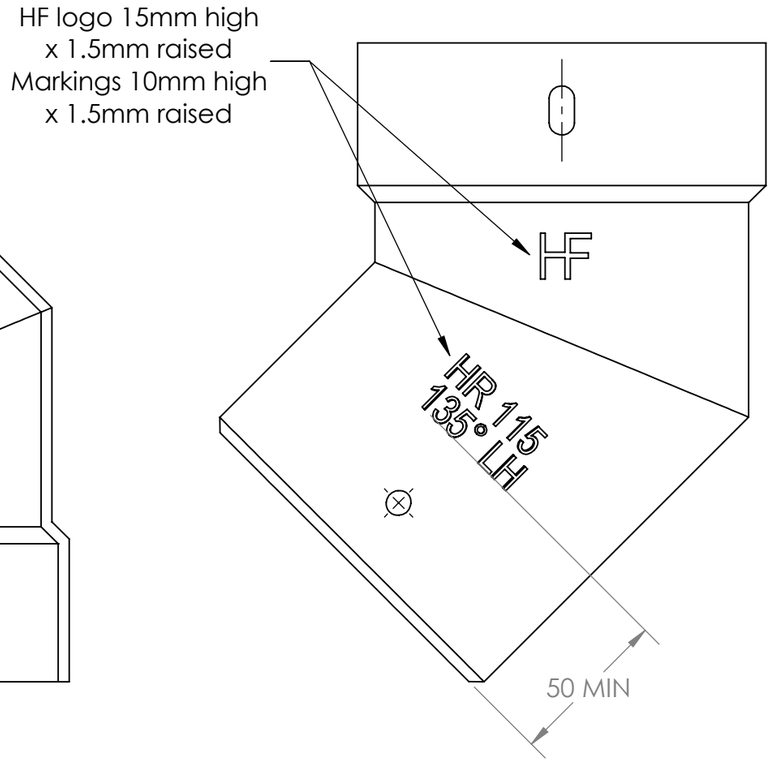

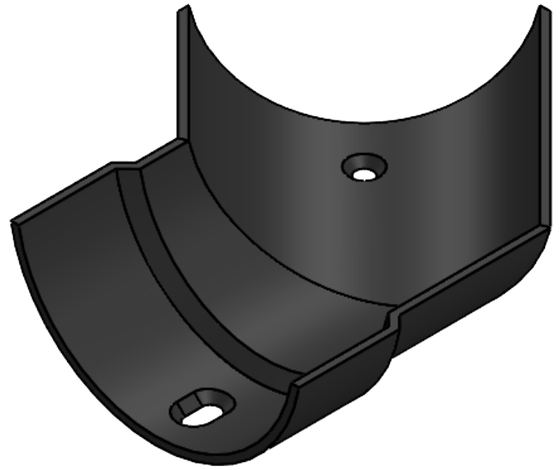

SCALE 1:2

UNCONTROLLED COPY

ALL DIMS IN mm

WATER LANE
SOUTH PARADE
HALIFAX
WEST YORKSHIRE
HX3 9HG

TEL: (44) 01422 330607
FAX: (44) 01422 320349
E-MAIL info@hargreavesfoundry.co.uk

Hargreaves Foundry Group

TITLE: 115mm Half Round LH 135° Angle		
MATERIAL: BSEN 1561 Grade:EN-GJL-150		
SCALE: 1:2 A3	DRAWN: S Clarke	CHECKED: S Clarke
DATE: 24/06/25	REF No: –	REV.: 1
DWG No: HR4512		

Copyright and Design right
This confidential drawing is the sole property of Hargreaves Foundry Group Companies and must not be reproduced or distributed to any third party withoutwritten permission. It must only be used for the purpose for which it has been issued and may be withdrawn upon request. The validity of the drawing is only guaranteed at the time of issue and is subject to change without notice.