

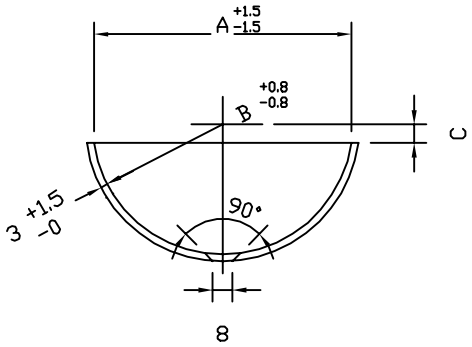

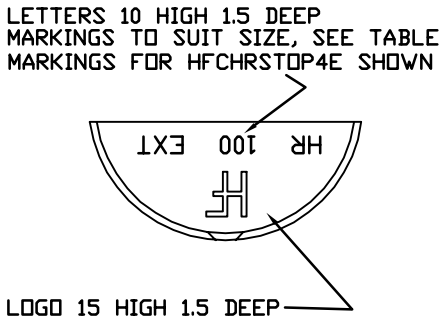

SIZE	REF	A	B	C	MARKINGS	SHORT REF.
100	HFCHRSTOP4E	110	55.5	8	HR 100 EXT	HR4030
115	HFCHRSTOP4.5E	124	62.5	10	HR 115 EXT	HR4530
125	HFCHRSTOP5E	138	69.5	11	HR 125 EXT	HR5030
150	HFCHRSTOP6E	162	81.5	13	HR 150 EXT	HR6030

IT IS ESSENTIAL THAT THE SOCKET AND SPIGOT ENDS FOR BOTH GUTTERS AND FITTINGS ARE CHECKED FOR COMPATABILITY THROUGH A RECORDED QUALITY SYSTEM BEFORE LEAVING THE MANUFACTURER.

Replaces Drawing CHRSTOPE

IMPORTANT:-

THE ANNULI (A)2.5 MIN. BETWEEN SOCKET AND SPIGOT JOINT IS CRITICAL FOR THE PERFORMANCE OF THE JOINT.

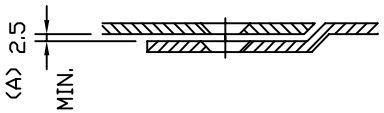

ALL DIMS IN mm

UNCONTROLLED COPY

Copyright and Design right
This confidential drawing is the sole property of Hargreaves Foundry Drainage Ltd and must not be reproduced or distributed to any third party without written permission. It must only be used for the purpose for which it has been issued and may be withdrawn upon request. The validity of the drawing is only guaranteed at the time of issue and is subject to change without notice.

WATER LANE
SOUTH PARADE
HALIFAX
WEST YORKSHIRE
HX3 9HG

Hargreaves
RAINWATER • SOIL • DRAINAGE

TEL: (44) 01422 330607
FAX: (44) 01422 320349
E-MAIL info@hargreavesfoundry.co.uk

TITLE: Half-Round External Stopend		
MATERIAL: BSEN 1561 Grade:-EN-GJL-150		
SCALE: NTS	DRAWN: PRDSorig	CHECKED: D.Hall
DATE: 26/06/15	REF No: HRXX30	REV.: 0
DWG No: HRXX30		