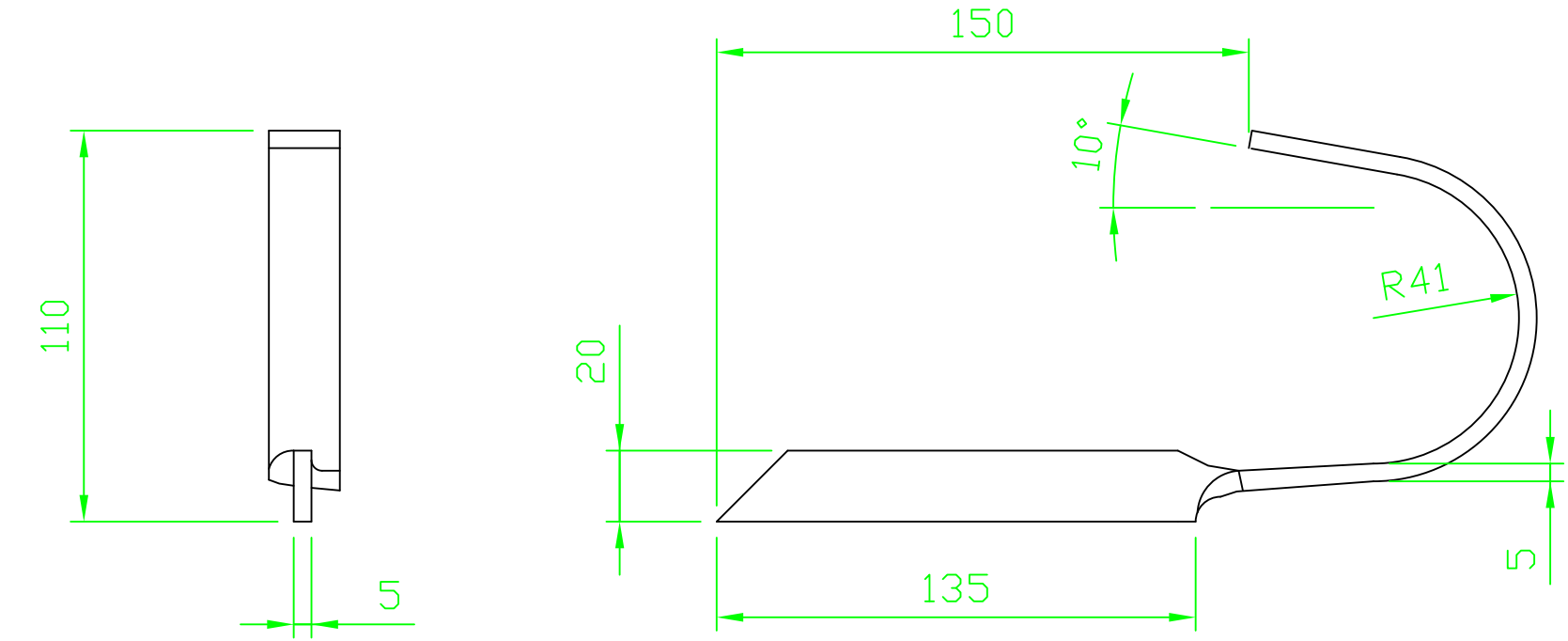

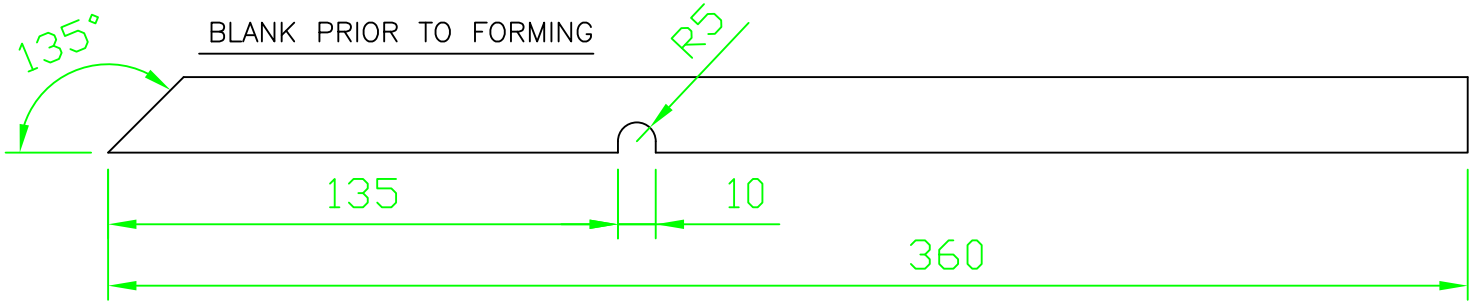

ALL DIMS IN mm

UNCONTROLLED COPY

Copyright and Design right
This confidential drawing is the sole property of Hargreaves Foundry Group Companies and must not be reproduced or distributed to any third party without written permission. It must only be used for the purpose for which it has been issued and may be withdrawn upon request. The validity of the drawing is only guaranteed at the time of issue and is subject to change without notice.

WATER LANE
SOUTH PARADE
HALIFAX
WEST YORKSHIRE
HX3 9HG

TEL: (44) 01422 330607
FAX: (44) 01422 320349
E-MAIL info@hargreavesfoundry.co.uk

Hargreaves Foundry Group

TITLE: 75mm Rainwater Holdfast			
MATERIAL: 20x5mm Galvanized Mild Steel			
SCALE: 1:2 A4	DRAWN: HF Tech	CHECKED: P.GILL	
DATE: 24.05.19	REF No: R3055	REV.: 1	
DWG No: R3055			