Light Commercial & Residential

MULTI-SPLIT

M-002 Multi-split Overview
M-004 Multi-split Outdoor Units Lineup
M-006 2-unit to 5-unit Multi-split Connectable Indoor Units
M-008 6-unit Multi-split Connectable Indoor Units
M-010 Simultaneous Multi-split Connectable Indoor Units
M-050 Feature Summary

Refrigerant type R32 models

M-012 2-unit to 5-unit Multi-split
M-018 Simultaneous Multi-split Twin/Triple
M-022 2-unit to 5-unit Multi-split Indoor Units Specifications
M-028 2-unit to 5-unit Multi-split Combination Table

Refrigerant type R410A models

M-016 6-unit Multi-split
M-020 Simultaneous Multi-split Twin/Triple/Double Twin
M-026 6-unit Multi-split Indoor Units Specifications
M-044 6-unit Multi-split Combination Table



A single outdoor unit drives multiple indoor units, offering greater flexibility in system configuration.

If you wish to keep an entire floor or two or more rooms comfortable, we recommend you choose a multi-split air conditioning system with a single outdoor unit. Choose one that meets your air conditioning requirements from the variety of models we offer. You can mix and match indoor and outdoor units as you wish to build the system that best suits your needs.

Multi-split Overview

Multi-split's space-saving outdoor unit allows for connections of up to eight indoor units for multiple rooms. Added to the lineup are models compatible with the R32 refrigerant, offering environmentally friendly comfort in homes, offices, stores, and various other settings.





3-unit, 4-unit, 5-unit Multi-split Types



3-unit 18/24 class



4-unit 30 class
5-unit 36 class

2-unit to 6-unit Multi-split

Recommended for residences, offices, and other situations where multiple rooms require air conditioning. Each of the 2 to 6 connected indoor units can also be operated individually. Operation control, time scheduling for each room, and energy-saving options can be set on both individual and central remote controllers. The outdoor unit is designed to save space and is flexible enough to be installed on a balcony or underneath a waist-high window.

Twin / Triple



Twin 36 class
(Single-phase/3-phase)



Twin/Triple 45/54 class
(Single-phase/3-phase)

Simultaneous Multi-split Type

Suitable for a small building, the entrance hall of a small office, meeting rooms, educational facilities, and other roomy areas where multiple indoor units need to be operated simultaneously. Up to 4 indoor units can be operated simultaneously, making the system perfect for air conditioning not only offices with large spaces, but also spaces with atypical layouts.

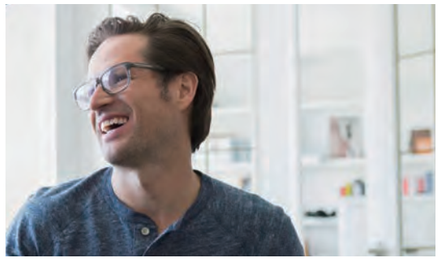

2-unit Multi-split



14 class



18 class

6-unit Multi-split



6-unit 45 class



Twin / Triple / Double Twin



72/90 class
(3-phase)

Multi-split Outdoor Units Lineup

EUROVENT CERTIFIED PERFORMANCE www.eurovent-certification.com

FUJITSU GENERAL (Euro) GmbH participates in the ECP program for AC. Check ongoing validity of certificate: www.eurovent-certification.com
*Models so marked are not ECC certified.

			Class	14	18	18	24	30	36	45		54	72	90
			Cooling rated capacity (kW)	4.0	5.0	5.4	6.8	8.0	10.0	12.5	14.0	14.0	19.0	22.0
2-unit, 3-unit, 4-unit, 5-unit Multi-split	2-unit Multi-split Up to 2 units	R32		AOEG14KBCA2	AOEG18KBCA2									
	3-unit Multi-split Up to 3 units		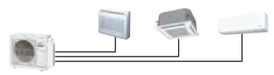			AOEG18KBCA3	AOEG24KBCA3							
	4-unit Multi-split Up to 4 units							AOEG30KBTA4						
	5-unit Multi-split Up to 5 units		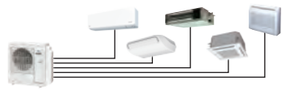						AOEG36KBTA5*[1]					
6-unit Multi-split	6-unit Multi-split Up to 6 units	R410A	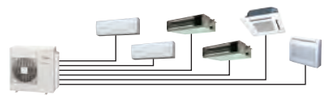							AOYG45LBLA6*				
Simultaneous Multi-split	Twin Single-phase	R32							AOEG36KBTB	AOEG45KBTB				
	Twin 3-phase								AOEG36KRTA	AOEG45KRTA				
	Twin/Triple Single-phase		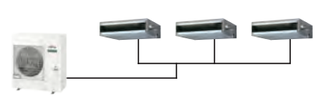									AOEG54KBTB		
	Twin/Triple 3-phase		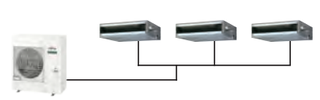									AOEG54KRTA		
	Twin/Triple/ Double Twin 3-phase	R410A	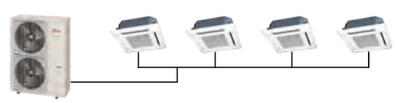										AOYG72LRLA	AOYG90LRLA

Notes:
1. 2-unit Multi-split:
Connectable indoor units are 2 units.
AOEG14KBTA2: Total capacity of indoor units connected must be between 3.0 kW and 6.0 kW.
AOEG18KBTA2: Total capacity of indoor units connected must be between 3.0 kW and 7.5 kW.

2. 3-unit Multi-split:
Connectable indoor units are 2 to 3 units.
AOEG18KBTA3: Total capacity of indoor units connected must be between 4.0 kW and 8.5 kW.
AOEG24KBTA3: Total capacity of indoor units connected must be between 4.0 kW and 10.5 kW.

3. 4-unit Multi-split:
Connectable indoor units are 2 to 4 units.
AOEG30KBTA4: Total capacity of indoor units connected must be between 7.5 kW and 14.0 kW.

4. 5-unit Multi-split:
Connectable indoor units are 2 to 5 units
AOEG36KBTA5: Total capacity of indoor units connected must be between 7.5 kW and 15.5 kW.

5. 6-unit Multi-split:
Connectable indoor units are 2 to 6 units
AOYG45LBLA6: Total capacity of indoor units connected must be between 9.5 kW and 18.0 kW.

*For compatible Outer Units with 5,000BTU models, please refer to the Design & Technical Manual Part. 1-1

Cooling rated capacity: *1: 9.5 kW

2-unit to 5-unit Multi-split Connectable Indoor Units

Type		2-unit		3-unit		4-unit	5-unit
Model name		AOEG14KBCA2	AOEG18KBCA2	AOEG18KBCA3	AOEG24KBCA3	AOEG30KBTA4	AOEG36KBTA5
Multi-split Type Outdoor Unit							
Capacity (kW)	Cooling	4.0	5.0	5.4	6.8	8.0	9.5
	Heating	4.4	5.6	6.8	8.0	9.6	10.6

Indoor Unit	BTU	kW Class						
 ASEH07/09/12/14KGTG ASYG07/09/12/14KGTF	7,000	2.0	●	●	●	●	●	●
	9,000	2.5	●	●	●	●	●	●
	12,000	3.5	●	●	●	●	●	●
	14,000	4.0	–	●	●	●	●	●
 ASEG07/09/12/14KETF ASYG07/09/12/14KETE ASEG07/09/12/14KETF-B ASYG07/09/12/14KETE-B	7,000	2.0	●	●	●	●	●	●
	9,000	2.5	●	●	●	●	●	●
	12,000	3.5	●	●	●	●	●	●
	14,000	4.0	–	●	●	●	●	●
  ASEH07/09/12/14KMCG ASYG07/09/12/14KMCF ASEH07/09/12/14KMCG-B	7,000	2.0	●	●	●	●	●	●
	9,000	2.5	●	●	●	●	●	●
	12,000	3.5	●	●	●	●	●	●
	14,000	4.0	–	●	●	●	●	●
ASEH05/07/09/12KNCA	5,000	1.5	●*	●*	●*	●*	●*	●*
	7,000	2.0	●	●	●	●	●	●
	9,000	2.5	●	●	●	●	●	●
	12,000	3.5	●	●	●	●	●	●
 ASEG18/22/24KMTE	18,000	5.0	–	–	–	●	●	●
	22,000	6.0	–	–	–	–	●	●
	24,000	7.0	–	–	–	–	●	●
 AGEG09/12/14KVCA	9,000	2.5	●	●	●	●	●	●
	12,000	3.5	●	●	●	●	●	●
	14,000	4.0	–	●	●	●	●	●
 AUXG07/09/12/14/18/22KVLA	7,000	2.0	●	●	●	●	●	●
	9,000	2.5	●	●	●	●	●	●
	12,000	3.5	●	●	●	●	●	●
	14,000	4.0	–	●	●	●	●	●
	18,000	5.0	–	–	–	●	●	●
	22,000	6.0	–	–	–	–	●	●

*For compatible Outer Units with 5,000BTU models, please refer to the Design & Technical Manual Part. 1-1

Type		2-unit		3-unit		4-unit	5-unit
Model name		AOEG14KBCA2	AOEG18KBCA2	AOEG18KBCA3	AOEG24KBCA3	AOEG30KBTA4	AOEG36KBTA5
Multi-split Type Outdoor Unit							
Capacity (kW)	Cooling	4.0	5.0	5.4	6.8	8.0	9.5
	Heating	4.4	5.6	6.8	8.0	9.6	10.6

Indoor Unit	BTU	kW Class						
 ARXG07/09/12/14/18KSLAP	7,000	2.0	●	●	●	●	●	●
	9,000	2.5	●	●	●	●	●	●
	12,000	3.5	●	●	●	●	●	●
	14,000	4.0	–	●	●	●	●	●
	18,000	5.0	–	–	–	●	●	●
 ARXG07/09/12/14/18KLLAP	7,000	2.0	●	●	●	●	●	●
	9,000	2.5	●	●	●	●	●	●
	12,000	3.5	●	●	●	●	●	●
	14,000	4.0	–	●	●	●	●	●
	18,000	5.0	–	–	–	●	●	●
 ARXH12/14/18/22KMTAP	12,000	3.5	●	●	●	●	●	●
	14,000	4.0	–	●	●	●	●	●
	18,000	5.0	–	–	–	●	●	●
	22,000	6.0	–	–	–	–	●	●
 ARXG22KMLB	22,000	6.0	–	–	–	–	●	●
 ABEG18/22KRTA	18,000	5.0	–	–	–	●	●	●
	22,000	6.0	–	–	–	–	●	●

6-unit Multi-split Connectable Indoor Units

REFRIGERANT R410A

Type		6-unit
Model name		AOYG45LBLA6
Multi-split Type Outdoor Unit		
Capacity (kW)	Cooling	12.5
	Heating	13.5

Indoor Unit	BTU	kW Class	
 ASYG07/09/12/14LMCE	7,000	2.0	●
	9,000	2.5	●
 ASYG07/09/12/14LUCA	12,000	3.5	●
	14,000	4.0	●
 ASYG18/24LF	18,000	5.0	●
	24,000	7.0	●
 AGYG09/12/14LV	9,000	2.5	●
	12,000	3.5	●
	14,000	4.0	●
 AUYG07/09/12/14/18LV	7,000	2.0	●
	9,000	2.5	●
	12,000	3.5	●
	14,000	4.0	●
	18,000	5.0	●
 ABYG14LVTA ABYG18LVTB	14,000	4.0	●
	18,000	5.0	●
 ARYG07/09/12/14/18LSLAP	7,000	2.0	●
	9,000	2.5	●
	12,000	3.5	●
	14,000	4.0	●
	18,000	5.0	●
 ARYG07/09/12/14/18LL	7,000	2.0	●
	9,000	2.5	●
	12,000	3.5	●
	14,000	4.0	●
	18,000	5.0	●



Simultaneous Multi-split Connectable Indoor Units

REFRIGERANT R32

Type		4HP		5HP		6HP	
Model name		AOEG36KBTB	AOEG36KRTA	AOEG45KBTB	AOEG45KRTA	AOEG54KBTB	AOEG54KRTA
Simultaneous Multi-split Type Outdoor Unit							
Capacity (kW)	Cooling	9.5		12.1		13.4	13.4
	Heating	10.8		13.5		15.5	15.5

Indoor Unit	BTU	kW Class	Twin			Triple
 AUXG18/22/24KVLA	18,000	5.0	● × 2	–	–	● × 3
	22,000	6.5	–	● × 2	–	–
	24,000	7.0	–	–	● × 2	–
 ARXG18KLLAP	18,000	5.0	● × 2	–	–	● × 3
 ARXG22KMLB ARXG24KMLA	22,000	6.5	–	● × 2	–	–
	24,000	7.0	–	–	● × 2	–
Separation tube			UTP-SX236A (18/22/24)			UTP-SX354A (18)

Note : Please be aware that 2-wired group control is not possible with Simultaneous Multi-split.
The WLAN modules from Airstage Mobile are not compatible with Simultaneous Multi

REFRIGERANT R410A

Type		8HP	10HP
Model name		AOYG72LRLA	AOYG90LRLA
Simultaneous Multi-split Outdoor Unit			
Capacity (kW)	Cooling	19.0	22.0
	Heating	22.4	27.0

Indoor Unit	BTU	kW Class	Twin	Triple	Double Twin	Twin	Triple	Double Twin
 AUYG18/22/24LV	18,000	5.0	–	–	● × 4	–	–	–
	22,000	6.5	–	–	–	–	–	● × 4
	24,000	7.0	–	● × 3	–	–	–	–
 AUYG30/36/45LR	30,000	8.8	–	–	–	–	● × 3	–
	36,000	10.6	● × 2	–	–	–	–	–
	45,000	12.5	–	–	–	● × 2	–	–
 ARYG18LLTB	18,000	5.0	–	–	● × 4	–	–	–
 ARYG22/24/ 30/36/45LM	22,000	6.5	–	–	–	–	–	● × 4
	24,000	7.0	–	● × 3	–	–	–	–
	30,000	8.8	–	–	–	–	● × 3	–
	36,000	10.6	● × 2	–	–	–	–	–
	45,000	12.5	–	–	–	● × 2	–	–
 ABYG/18/22/24LV	18,000	5.0	–	–	● × 4	–	–	–
	22,000	6.5	–	–	–	–	–	● × 4
	24,000	7.0	–	● × 3	–	–	–	–
 ABYG30/36/45LR	30,000	8.8	–	–	–	–	● × 3	–
	36,000	10.6	● × 2	–	–	–	–	–
	45,000	12.5	–	–	–	● × 2	–	–
Separation tube			UTP-SX272A × 1	UTP-SX372A × 1	UTP-SX272A x 1, UTP-SX236A x 2	UTP-SX272A × 1	UTP-SX372A × 1	UTP-SX272A × 1, UTP-SX254A × 2

2-unit, 3-unit, 4-unit, 5-unit, Multi-split



High Energy Saving

With the adoption of a high-efficiency DC twin-rotary compressor, all models achieved an energy efficiency scale of A+++ for cooling and A++ for heating.

Class
Cooling A+++
Heating A++

SEER 8.7* SCOP 4.7

*: 2-units 14 class when connected with a wall mounted [KG/KM] unit.

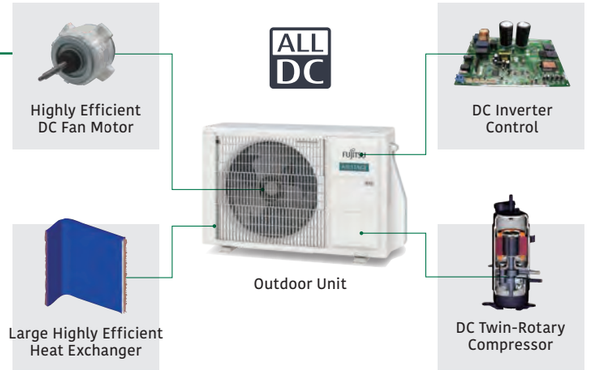

R32 Refrigerant Model

In addition to its high energy efficiency, the R32 refrigerant has a larger volumetric capacity than the R410A refrigerant, which means the R32 refrigerant models require less refrigerant charge than the R410A models.

Pre-charge refrigerant amount (kg)	R32	R410A
2-unit 14 class	0.9	1.25
2-unit 18 class	1.02	1.30
3-unit 18 class	1.8	2.2
3-unit 24 class	1.8	2.2
4-unit 30 class	2.2	3.3
5-unit 36 class	2.5	4.0

Quiet Operation

The sound power level is reduced by up to 7 dB compared to the current R410 models.

Sound Power Level *3-unit 24 class (cooling)

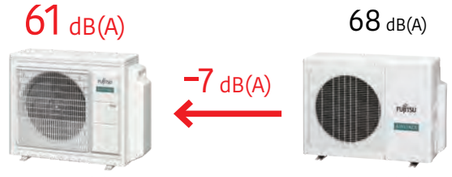

Space-Saving Installation

Multiple indoor units can be connected to 1 outdoor unit by long pipe as well. Unlike a single type, the outdoor unit can be installed in the most space-saving location.



Compact Design

Unlike a single type, the outdoor unit can be installed in the most space-saving location.

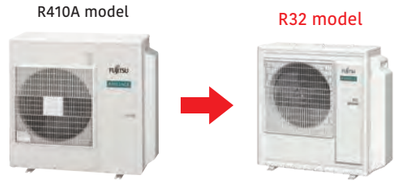

Depth difference -15.5 %!*

Space requirement -36.2 %!*

*: Compared with current 5-unit multi models

Easy Evacuation

All connected pipes and indoor units can be evacuated quickly via our centralized valve method.
Requires evacuation only once.

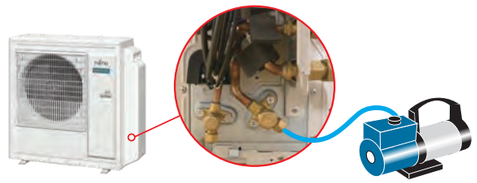

Wide Range of Indoor Units with Various Models

We offer 41 models in 5 types in a capacity range from 2.0 kW to 6.0 kW. Wide range of requirements can be realized from private homes through to large shops and hotels



Models Equipped with the R32 Refrigerant

Wall-mounted type with sophisticated design

Designer series



Cool Beauty Design
07/09/12/14 kBTU



High Spec & Design
07/09/12/14 kBTU

Standard series



High Efficiency & Comfort
07/09/12/14 kBTU



Compact Size
05/07/09/12 kBTU



High Efficiency & Large Rooms
18/22/24 kBTU

Middle and small capacity models are available. This makes installation easier in small spaces.

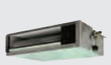

Mini Duct
07/09/12/14/18 kBTU



Slim Duct
07/09/12/14/18 kBTU



Medium static pressure duct
12/14/18/22 kBTU
22 kBTU



Compact Cassette
07/09/12/14/18/22 kBTU



Floor
09/12/14/ kBTU



Ceiling
18/22 kBTU

2-unit: AOEG14KBCA2 / AOEG18KBCA2
3-unit: AOEG18KBCA3 / AOEG24KBCA3
4-unit: AOEG30KBTA4
5-unit: AOEG36KBTA5



2-unit　3-unit　4-unit, 5-unit

Specifications (2-unit)

Model name				AOEG14KBCA2	AOEG18KBCA2
Power Source				Single phase, ~230 V, 50 Hz	
Rated Capacity	Cooling	Rated	kW	4.0	5.0
		Min.-Max.		1.4-4.6	1.7-5.8
	Heating	Rated		4.4	5.6
		Min.-Max.		1.1-5.5	1.8-6.6
EER	Cooling		W/W	4.12	4.03
COP	Heating			4.63	4.59
Sound Pressure Level (High)	Cooling		dB(A)	47	47
	Heating			49	50
Sound Power Level (High)	Cooling			60	60
	Heating			62	62
Airflow Rate	Cooling/Heating		m^3/h	1,670/1,670	1,960/2,020
Net Dimensions H × W × D			mm	542 × 799 × 290	632 × 799 × 290
Weight			kg	33	37
Connection Pipe Diameter	Liquid		mm	6.35 × 2	6.35 × 2
	Gas			9.52 × 2	9.52 × 2
Max. Pipe Length	Total/Each		m	30/20	30/20
Max. Height Difference	Between Outdoor Unit and Each Indoor Unit			15	15
	Between Indoor Units			10	10
Operating Range	Cooling		°CDB	-10 to 46	-10 to 46
	Heating			-15 to 24	-15 to 24
Refrigerant	Type (Global Warming Potential)			R32 (675)	R32 (675)
	Charge		kg (CO2eq-T)	0.9 (0.608)	1.02 (0.689)

Specifications (3-unit)

Model name				AOEG18KBCA3	AOEG24KBCA3
Power Source				Single phase, ~230 V, 50 Hz	
Rated Capacity	Cooling	Rated	kW	5.4	6.8
		Min.-Max.		1.8-7.0	1.8-8.5
	Heating	Rated		6.8	8.0
		Min.-Max.		2.0-8.0	2.0-9.2
EER	Cooling		W/W	4.78	3.90
COP	Heating			4.89	4.40
Sound Pressure Level (High)	Cooling		dB(A)	46	48
	Heating			49	53
Sound Power Level (High)	Cooling			59	61
	Heating			61	67
Airflow Rate	Cooling/Heating		m^3/h	2,220/2,160	2,270/2,730
Net Dimensions H × W × D			mm	716 × 820 × 315	716 × 820 × 315
Weight			kg	46	46
Connection Pipe Diameter	Liquid		mm	6.35 × 3	6.35 × 3
	Gas			9.52 × 3	9.52 × 2, 12.70 × 1 adapter [12.70 → 9.52] × 1
Max. Pipe Length	Total/Each		m	50/25	50/25
Max. Height Difference	Between Outdoor Unit and Each Indoor Unit			15	15
	Between Indoor Units			10	10
Operating Range	Cooling		°CDB	-10 to 46	-10 to 46
	Heating			-15 to 24	-15 to 24
Refrigerant	Type (Global Warming Potential)			R32 (675)	R32 (675)
	Charge		kg (CO2eq-T)	1.8 (1.215)	1.8 (1.215)

Specifications (4-unit, 5-unit)

Model name				AOEG30KBTA4	AOEG36KBTA5
Power Source				Single phase, ~230 V, 50 Hz	
Rated Capacity	Cooling	Rated	kW	8.0	9.5
		Min.-Max.		2.4-10.1	3.0-11.0
	Heating	Rated		9.6	10.6
		Min.-Max.		3.0-11.2	3.5-12.0
EER	Cooling		W/W	3.90	3.80
COP	Heating			4.55	4.50
Sound Pressure Level (High)	Cooling		dB(A)	50	52
	Heating			54	55
Sound Power Level (High)	Cooling			63	65
	Heating			66	68
Airflow Rate	Cooling/Heating		m^3/h	2,400/2,950	2,450/2,900
Net Dimensions H × W × D			mm	884 × 820 × 315	884 × 820 × 315
Weight			kg	55	59
Connection Pipe Diameter	Liquid		mm	6.35 × 4	6.35 × 5
	Gas			9.52 × 2, 12.70 × 2 adapter [12.70 → 9.52] × 2	9.52 × 3, 12.70 × 2 adapter [12.70 → 9.52] × 2 adapter [9.52 → 12.70] × 1
Max. Pipe Length*	Total/Each		m	70/25	75/25
Max. Height Difference	Between Outdoor Unit and Each Indoor Unit			15	15
	Between Indoor Units			10	10
Operating Range	Cooling		°CDB	-10 to 46	-10 to 46
	Heating			-15 to 24	-15 to 24
Refrigerant	Type (Global Warming Potential)			R32 (675)	R32 (675)
	Charge		kg (CO2eq-T)	2.2 (1.485)	2.5 (1.688)

*Length not applicable when floor units are connected. For details, refer to the installation manual.

Dimensions

(Unit: mm)

2-unit: AOEG14KBCA2

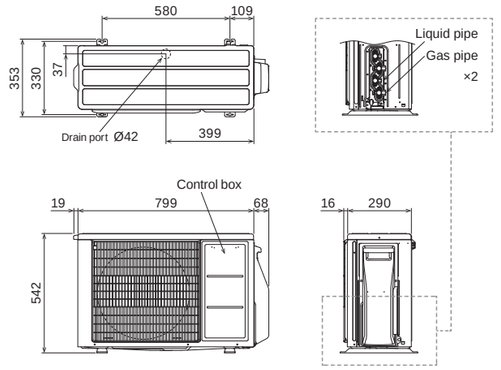

2-unit: AOEG18KBCA2

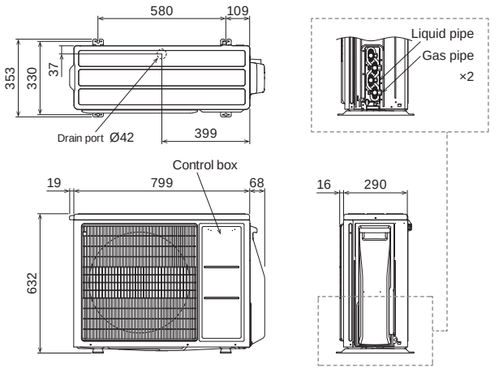

3-unit: AOEG18KBCA3 / AOEG24KBCA3

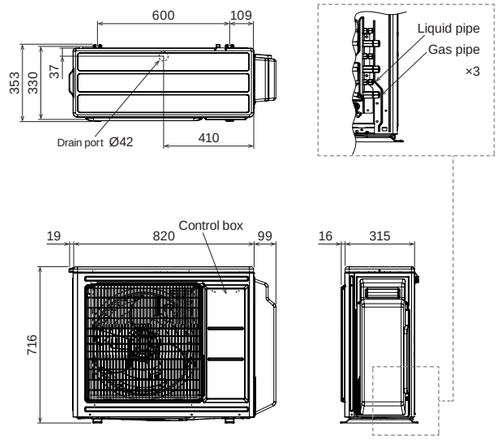

4-unit: AOEG30KBTA4
5-unit: AOEG36KBTA5

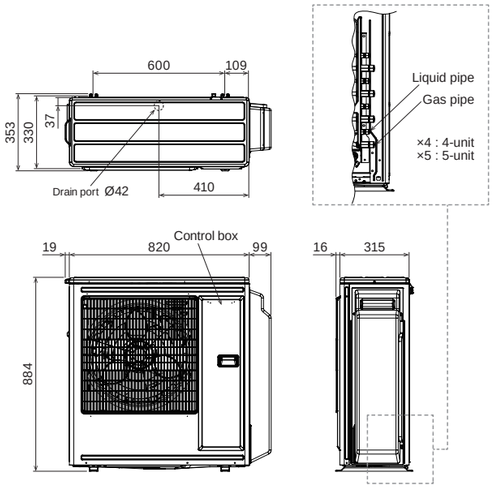

6-unit Multi-split



REFRIGERANT R410A

ALL DC

A Wide Variety of Models to Choose from

We offer 26 models in 5 types in a capacity range from 2.0 kW to 7.0 kW. A wide range of requirements can be realized from private homes through to large shops and hotels.















Compact Design

Multiple indoor units can be connected to 1 outdoor unit by long pipe as well.
Unlike a single type, the outdoor unit can be installed in the most space-saving location.



970 mm

Easy Installation

All connected pipes and indoor units can be evacuated quickly via our centralized valve method.
Requires evacuation only once.

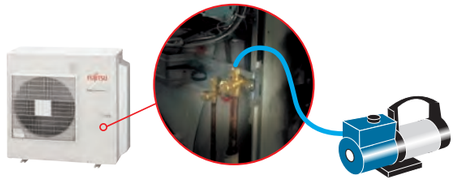

Central & Individual Control

- Batched control of up to 6 indoor units. Unified setting of room temperature, airflow volume, and local control restrictions across units.
- Language can be selected from English, French, German, Greek, Italian, Portuguese, Russian, Spanish, or Turkish.
- Large backlit indicator lamp screen
- Large easy-to-see operation panel

Max. Controllable
1 multi-system

Max. Controllable
6 indoor units



REFRIGERANT R410A

6-unit: AOYG45LBLA6



Specifications

Model name				AOYG45LBLA6
Power Source				Single phase, ~230 V, 50 Hz
Rated Capacity	Cooling	Rated	kW	12.5
		Min.-Max.		3.5-14.0
	Heating	Rated		13.5
		Min.-Max.		3.5-16.0
EER	Cooling		W/W	3.50
COP	Heating			4.00
Sound Pressure Level (High)	Cooling		dB(A)	53
	Heating			55
Sound Power Level (High)	Cooling			-
	Heating			-
Airflow Rate	Cooling/Heating		m^3/h	4,200/4,200
Net Dimensions H × W × D			mm	998 × 970 × 370
Weight			kg	94
Connection Pipe Diameter	Liquid		mm	6.35 × 6
	Gas			9.52 × 4, 12.70 × 2
Max. Pipe Length	Total/Each		m	80/25
Max. Height Difference	Between Outdoor Unit and Each Indoor Unit.			15
	Between Indoor Units.			10
Operating Range	Cooling		°CDB	-10 to 46
	Heating			-15 to 24
Refrigerant	Type (Global Warming Potential)			R410A (2,088)
	Charge		kg (CO2eq-T)	4.00 (8.352)

Dimensions

(Unit: mm)

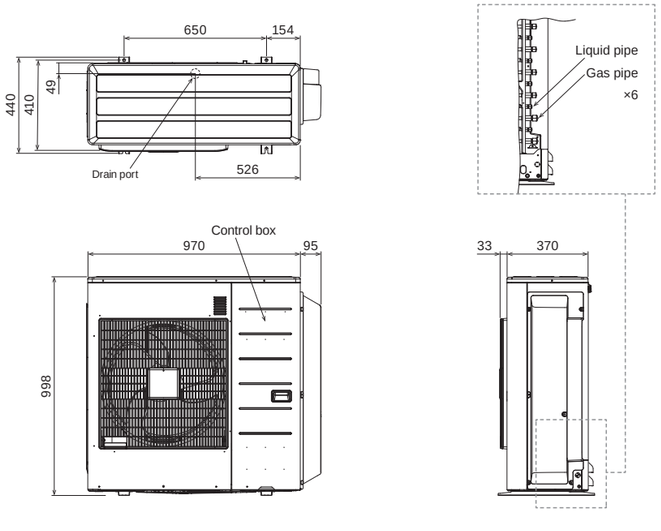

Simultaneous Multi-split Type

Twin / Triple



Meets a variety of installation needs from offices to commercial spaces, with up to 3 indoor units in the same room connected to an outdoor unit.

Select indoor units according to floor layout and heat load estimated by the number of people working in the room and the direction and intensity of sunlight entering the room.
Perfect airflow distribution can be achieved for optimum comfort.

Installation according to floor layout

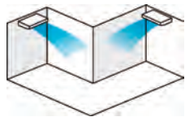

Installation according to lighting conditions

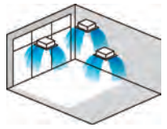

Design Flexibility

Slim & Compact Design

The outdoor unit in this series is 22.7% shorter* than a twin-fan outdoor unit. The reduced height makes it easy to install in tight spaces.



Flexible Installation

Pipe length of up to 50 m and a height difference of up to 30 m can be accommodated. Multi-split systems can be installed in large residences and multi-story buildings.

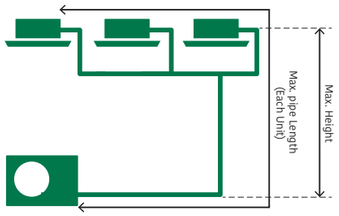

Max. Pipe Length (Each Unit): **50 m**

Max. Height: **30 m**

Lineup of Indoor Units

The indoor units, available in 6 models of 3 types, can be selected according to room size and conditions.



Compact Cassette



Slim Duct



Duct

Note : Please be aware that 2-wired group control is not possible with Simultaneous Multi-split.

Model: AOEG36KBTB / AOEG45KBTB / AOEG54KBTB
AOEG36KRTA [3-phase] / AOEG45KRTA [3-phase] / AOEG54KRTA [3-phase]



36



45/54

Specifications (Indoor units/Outdoor units)

Indoor Units Model name				Compact Cassette		
				AUXG18KVLA	AUXG22KVLA	AUXG24KVLA
Power Source				Single phase, ~230 V, 50 Hz		
Airflow Rate	Cooling	H/M/L/Q	m^3/h	680/580/490/410	830/740/600/450	930/830/600/450
	Heating	H/M/L/Q	m^3/h	800/680/580/450	860/760/700/530	930/850/700/530
Net Dimensions H × W × D			mm	245 × 570 × 570	245 × 570 × 570	245 × 570 × 570
Weight			kg	15	16	16
Cassette Grille				UTG-UFYF-W	UTG-UFYF-W	UTG-UFYF-W

Indoor Units Model name				Duct		
				ARXG18KLLAP	ARXG22KMLB	ARXG24KMLA
Power Source				Single phase, ~230 V, 50 Hz		
Airflow Rate	Cooling	H/M/L/Q	m^3/h	940/880/820/750	1,100/910/750/580	1,100/910/750/580
	Heating	H/M/L/Q	m^3/h	940/880/820/750	1,100/910/750/580	1,100/910/750/580
Net Dimensions H × W × D			mm	198 × 900 × 620	270 × 1,135 × 700	270 × 1,135 × 700
Weight			kg	20	35	35

Outdoor Units Model name			AOEG36KBTB	AOEG45KBTB	AOEG54KBTB	AOEG36KRTA	AOEG45KRTA	AOEG54KRTA
Capacity	Cooling	kW	9.5	12.1	13.4	9.5	12.1	13.4
	Heating	kW	10.8	13.5	15.5	10.8	13.5	15.5
Power Source			Single phase, ~230 V, 50 Hz			3-phase, ~400 V, 50 Hz		
Pdesign	Cooling	kW	9.5	–	–	9.5	-	-
	Heating (-10°C)	kW	8.7	–	–	8.7	-	-
SEER	Cooling	W/W	6.10	–	-	6.10	-	-
SCOP	Heating	W/W	4.00	–	–	4.00	-	-
Annual Energy Consumption	Cooling	kWh/a	545	–	–	545	-	-
	Heating	kWh/a	3,044	–	–	3,044	-	-
Energy Efficiency Class	Cooling		A++	–	–	A++	-	-
	Heating		A+	–	–	A+	-	-
Sound Pressure Level (High)	Cooling	dB(A)	55	57	57	55	57	57
	Heating	dB(A)	55	57	59	55	57	59
Sound Power Level (High)	Cooling	dB(A)	70	71	73	70	71	73
	Heating	dB(A)	70	71	73	70	71	73
Airflow Rate	Cooling/Heating	m^3/h	3,750/3,750	4,450/4,450	4,450/4,450	3,750/3,750	4,450/4,450	4,450/4,450
Net Dimensions H × W × D		mm	788 × 940 × 320	998 × 940 × 320	998 × 940 × 320	788 × 940 × 320	998 × 940 × 320	998 × 940 × 320
Weight		kg	52	67	67	53	67	67
Connection Pipe Diameter (Liquid/Gas)		mm	9.52/15.88	9.52/15.88	9.52/15.88	9.52/15.88	9.52/15.88	9.52/15.88
Max. Pipe Length (Pre-Charge)		m	50 (30)	50 (30)	50 (30)	50 (30)	50 (30)	50 (30)
Max. Height Difference		m	30	30	30	30	30	30
Operating Range	Cooling	°CDB	-15 to 46	-15 to 46	-15 to 46	-15 to 46	-15 to 46	-15 to 46
	Heating	°CDB	-15 to 24	-15 to 24	-15 to 24	-15 to 24	-15 to 24	-15 to 24
Refrigerant	Type (Global Warming Potential)		R32 (675)	R32 (675)	R32 (675)	R32 (675)	R32 (675)	R32 (675)
	Charge	kg (CO2eq-T)	1.90 (1.283)	2.70 (1.823)	2.70 (1.823)	1.90 (1.283)	2.70 (1.823)	2.70 (1.823)
Separation tube			UTP-SX236A (Twin)	UTP-SX236A (Twin)	UTP-SX236A (Twin) UTP-SX354A (Triple)	UTP-SX236A (Twin)	UTP-SX236A (Twin)	UTP-SX236A (Twin) UTP-SX354A (Triple)

• Indoor units of different types and capacity cannot be connected.
• The above specifications apply when used with a cassette type indoor unit.

Dimensions

(Unit: mm)

AOEG36KBTB / AOEG36KRTA

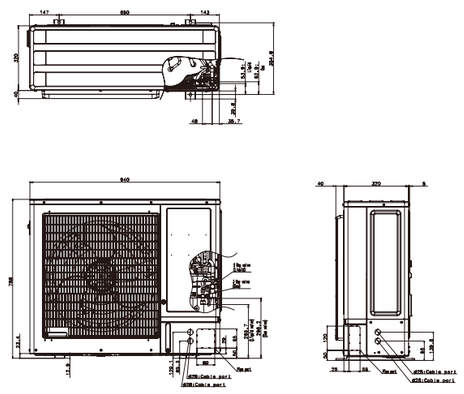

AOEG45KBTB / AOEG54KBTB
AOEG45KRTA / AOEG54KRTA

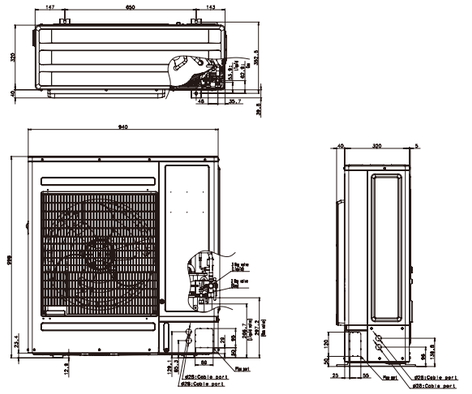

Simultaneous Multi-split Type

Twin / Triple / Double Twin



REFRIGERANT R410A

ALL DC

Meets a variety of installation needs from an open-plan office to a retail store, with up to 4 indoor units connected to an outdoor unit.

Select indoor units according to floor layout and heat load estimated by the number of people working in the room and the direction and intensity of sunlight entering the room. Perfect airflow distribution can be achieved for optimum comfort.

Installation according to floor layout



Installation according to lighting conditions



Installation according to layout and lighting conditions

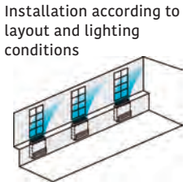

Installation according to large space

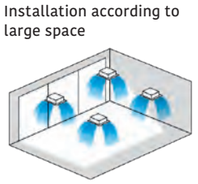

Simultaneous Control

Up to 16 indoor units can be controlled simultaneously with a wired remote controller.

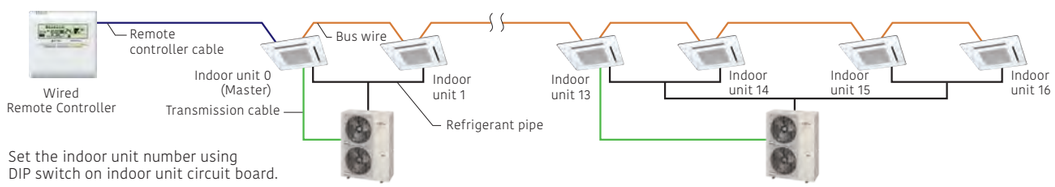

Set the indoor unit number using DIP switch on indoor unit circuit board.

*The following functions are not provided by a wireless remote controller: Timer operation, Sleep Timer operation, 10°C Heat operation

Indoor Unit Lineup

The indoor units, available in 18 models of 6 types, can be selected according to room size and conditions.



Compact Cassette



Cassette



Slim Duct



Duct



Floor/Ceiling Universal



Ceiling

REFRIGERANT R410A

Model: AOYG72LRLA [3-phase] / AOYG90LRLA [3-phase]



Specifications (Indoor units/Outdoor units)

Indoor Units Model name				Compact Cassette, Cassette					
				AUYG18LVLB	AUYG22LVLA	AUYG24LVLA	AUYG30LRLE	AUYG36LRLE	AUYG45LRLA
Power Source				Single phase, ~230 V, 50 Hz					
Airflow Rate	Cooling	H/M/L/Q	m^3/h	750/610/520/410	930/830/600/450	930/830/600/450	1,600/1,400/1,270/1,150	1,800/1,400/1,270/1,150	1,900/1,640/1,460/1,250
	Heating	H/M/L/Q	m^3/h	800/710/600/450	930/860/700/530	930/830/600/450	1,800/1,400/1,270/1,150	1,800/1,400/1,270/1,150	1,900/1,640/1,460/1,250
Net Dimensions H × W × D			mm	245 × 570 × 570	245 × 570 × 570	245 × 570 × 570	288 × 840 × 840	288 × 840 × 840	288 × 840 × 840
Weight			kg	15	16	16	26	26	26
Cassette Grille				UTG-UFYD-W			UTG-UFYD-W		

Indoor Units Model name				Duct					
				ARYG18LLTB	ARYG22LMLA	ARYG24LMLA	ARYG30LMLE	ARYG36LMLE	ARYG45LMLA
Power Source				Single phase, ~230 V, 50 Hz					
Airflow Rate	Cooling	H/M/L/Q	m^3/h	940/880/820/750	1,100/910/750/580	1,100/910/750/580	1,900/1,620/1,270/980	1,900/1,620/1,270/980	2,100/1,750/1,350/1,070
	Heating	H/M/L/Q	m^3/h	940/880/820/750	1,100/910/750/580	1,100/910/750/580	2,100/1,620/1,270/980	2,100/1,620/1,270/980	2,100/1,750/1,350/1,070
Net Dimensions H × W × D			mm	198 × 900 × 620	270 × 1135 × 700	270 × 1135 × 700	270 × 1135 × 700	270 × 1135 × 700	270 × 1135 × 700
Weight			kg	23	38	40	40	40	40 (88)

Indoor Units Model name				Floor/Ceiling, Ceiling					
				ABYG18LVTB	ABYG22LVTA	ABYG24LVTA	ABYG30LRTE	ABYG36LRTE	ABYG45LRTA
Power Source				Single phase, ~230 V, 50 Hz					
Airflow Rate	Cooling	H/M/L/Q	m^3/h	780/700/560/500	980/820/680/540	980/820/680/540	1,660/1,500/1,200/1,000	1,900/1,500/1,200/1,000	2,100/1,700/1,400/1,100
	Heating	H/M/L/Q	m^3/h	780/700/560/500	980/820/680/540	980/820/680/540	1,660/1,500/1,200/1,000	1,900/1,500/1,200/1,000	2,100/1,700/1,400/1,100
Net Dimensions H × W × D			mm	199 × 990 × 655	199 × 990 × 655	199 × 990 × 655	240 × 1660 × 700	240 × 1660 × 700	240 × 1660 × 700
Weight			kg	27	27	27	46	46	46

Outdoor Units Model name			AOYG72LRLA			AOYG90LRLA		
Capacity	Cooling	kW	19.0			22.0		
	Heating	kW	22.4			27.0		
Power Source			3-phase, ~400 V, 50 Hz					
Sound Pressure Level (High)	Cooling/Heating	dB(A)	55/55			55/57		
Airflow Rate	Cooling/Heating	m^3/h	8,400/8,400			8,400/9,000		
Net Dimensions H × W × D		mm	1,428 × 1,080 × 480			1,428 × 1,080 × 480		
Weight		kg	163			172		
Connection Pipe Diameter (Liquid/Gas)		mm	12.7/25.4			12.7/25.4		
Max. Pipe Length (Pre-Charge)		m	100 (30)			100 (30)		
Max. Height Difference		m	30			30		
Operating Range	Cooling	°CDB	-15 to 46			-15 to 46		
	Heating	°CDB	-20 to 24			-20 to 24		
Refrigerant	Type (Global Warming Potential)		R410A (2,088)			R410A (2,088)		
	Charge	kg (CO2eq-T)	5.6 (11.693)			7.1 (14.825)		
Separation tube			UTP-SX272A × 1 (Twin)	UTP-SX372A × 1 (Triple)	UTP-SX272A × 1 UTP-SX236A × 2 (Double Twin)	UTP-SX272A × 1 (Twin)	UTP-SX372A × 1 (Triple)	UTP-SX272A × 1 UTP-SX254A × 2 (Double Twin)

*: That specification is not fixed yet.

• Indoor units of different types and capacity cannot be connected.
• The above specifications apply when used with a cassette type indoor unit.

Dimensions

(Unit: mm)

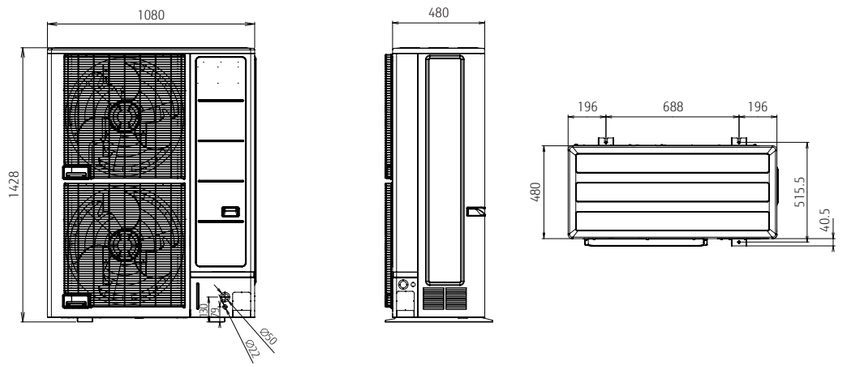

2-unit to 5-unit Multi-split
Indoor Units Specifications





Wall-mounted type



Model name	Indoor unit			ASEH07KGTG ASYG07KGTF	ASEH09KGTG ASYG09KGTF	ASEH12KGTG ASYG12KGTF	ASEH14KGTG ASYG14KGTF
kW Class			kW	2.0	2.5	3.5	4.0
Power Source				Single phase, ~230 V, 50 Hz			
Sound Pressure Level	Cooling	H/M/L/Q	dB(A)	38/33/29/21	40/34/29/21	40/35/30/21	43/36/30/21
	Heating			41/35/31/22	42/36/31/22	42/38/33/22	44/39/33/24
Sound Power Level	Cooling	H	dB(A)	54	55	56	57
	Heating			56	57	58	59
Airflow Rate	Cooling	H/M/L/Q	m^3/h	650/540/430/270	700/560/430/270	700/560/430/270	770/600/450/280
	Heating			720/580/460/330	750/610/470/330	770/640/520/330	800/660/520/340
Net Dimensions			mm	270 × 834 × 215	270 × 834 × 215	270 × 834 × 215	270 × 834 × 215
Weight			kg	10	10	10	10
Connection Pipe Diameter		Liquid/Gas	mm	6.35/9.52	6.35/9.52	6.35/9.52	6.35/9.52

Wall-mounted type



Model name	Indoor unit			ASEH07KETF ASEH07KETF-B ASYG07KETE ASYG07KETE-B	ASEH09KETF ASEH09KETF-B ASYG09KETE ASYG09KETE-B	ASEH12KETF ASEH12KETF-B ASYG12KETE ASYG12KETE-B	ASEH14KETF ASEH14KETF-B ASYG14KETE ASYG14KETE-B
kW Class			kW	2.0	2.5	3.5	4.0
Power Source				Single phase, ~230 V, 50 Hz			
Sound Pressure Level	Cooling	H/M/L/Q	dB(A)	38/33/29/21	40/34/29/21	40/35/30/21	43/36/30/21
	Heating			41/35/31/22	42/36/31/22	42/38/33/22	44/39/33/24
Sound Power Level	Cooling	H	dB(A)	54	55	55	57
	Heating			56	57	58	59
Airflow Rate	Cooling	H/M/L/Q	m^3/h	650/540/430/270	700/560/430/270	700/560/430/270	770/600/450/280
	Heating			720/580/460/330	750/610/470/330	770/640/520/330	800/660/520/340
Net Dimensions			mm	295 × 950 (wall side: 840) × 230	295 × 950 (wall side: 840) × 230	295 × 950 (wall side: 840) × 230	295 × 950 (wall side: 840) × 230
Weight			kg	11	11	11	11.5
Connection Pipe Diameter		Liquid/Gas	mm	6.35/9.52	6.35/9.52	6.35/9.52	6.35/9.52

Wall-mounted type



Model name	Indoor unit			ASEH07KMCG ASEH07KMCG-B ASYG07KMCF	ASEH09KMCG ASEH09KMCG-B ASYG09KMCF	ASEH12KMCG ASEH12KMCG-B ASYG12KMCF	ASEH14KMCG ASEH14KMCG-B ASYG14KMCF
kW Class			kW	2.0	2.5	3.5	4.0
Power Source				Single phase, ~230 V, 50 Hz			
Sound Pressure Level	Cooling	H/M/L/Q	dB(A)	38/33/29/21	40/34/29/21	40/35/30/21	43/36/30/21
	Heating			41/35/31/22	42/36/31/22	42/38/33/22	44/39/33/24
Sound Power Level	Cooling	H	dB(A)	54	55	55	57
	Heating			56	57	58	59
Airflow Rate	Cooling	H/M/L/Q	m^3/h	650/540/430/320	700/560/430/320	700/560/430/320	770/600/450/310
	Heating			720/580/460/330	750/610/470/330	780/640/520/330	820/660/520/340
Net Dimensions			mm	270 × 834 × 215	270 × 834 × 215	270 × 834 × 215	270 × 834 × 215
Weight			kg	10	10	10	10
Connection Pipe Diameter		Liquid/Gas	mm	6.35/9.52	6.35/9.52	6.35/9.52	6.35/9.52

Wall-mounted type

Model name	Indoor unit			ASEH05KNCA	ASEH07KNCA	ASEH09KNCA	ASEH12KNCA
kW Class			kW	1.5	2.0	2.5	3.5
Power Source				Single phase, ~230 V, 50 Hz			
Sound Pressure Level	Cooling	H/M/L/Q	dB(A)	34 / 33 / 29 / 21	36 / 33 / 29 / 21	41 / 35 / 29 / 21	42 / 36 / 32 / 21
	Heating			34 / 32 / 30 / 22	36 / 33 / 30 / 22	41 / 34 / 30 / 22	42 / 35 / 31 / 22
Sound Power Level	Cooling	H	dB(A)	50	51	56	57
	Heating			50	51	56	57
Airflow Rate	Cooling	H/M/L/Q	m^3/h	500 / 450 / 390 / 250	530 / 460 / 390 / 250	640 / 500 / 390 / 250	660 / 520 / 440 / 250
	Heating			500 / 450 / 420 / 280	530 / 460 / 420 / 280	640 / 500 / 420 / 280	660 / 520 / 440 / 280
Net Dimensions			mm	270 × 784 × 222	270 × 784 × 222	270 × 784 × 222	270 × 784 × 222
Weight			kg	9	9	9	9
Connection Pipe Diameter		Liquid/Gas	mm	6.35 / 9.52	6.35 / 9.52	6.35 / 9.52	6.35 / 9.52

Wall-mounted type



Model name	Indoor unit			ASEG18KMTE	ASEG22KMTE	ASEG24KMTE
kW Class			kW	5.0	6.0	7.0
Power Source				Single phase, ~230 V, 50 Hz		
Sound Pressure Level	Cooling	H/M/L/Q	dB(A)	45/40/35/29	48/40/35/29	49/40/35/29
	Heating			46/40/35/29	48/40/35/29	49/40/35/29
Sound Power Level	Cooling	H	dB(A)	60	62	65
	Heating			61	62	65
Airflow Rate	Cooling	H/M/L/Q	m^3/h	980/810/640/510	1,060/810/640/510	1,170/850/640/510
	Heating			1,020/850/640/510	1,060/850/640/510	1,170/850/640/510
Net Dimensions			mm	280 × 980 × 240	280 × 980 × 240	280 × 980 × 240
Weight			kg	12.5	12.5	12.5
Connection Pipe Diameter		Liquid/Gas	mm	6.35/12.70	6.35/12.70	6.35/12.70

Floor



Model name	Indoor unit			AGEG09KVCA	AGEG12KVCA	AGEG14KVCA
kW Class			kW	2.5	3.5	4.0
Power Source				Single phase, ~230 V, 50 Hz		
Sound Pressure Level	Cooling	H/M/L/Q	dB(A)	39/34/28/22	42/36/30/22	44/38/31/22
	Heating			39/35/30/22	42/38/32/22	44/39/33/22
Sound Power Level	Cooling	H	dB(A)	52	55	56
	Heating			52	55	56
Airflow Rate	Cooling	H/M/L/Q	m^3/h	530/440/360/270	600/490/380/270	650/520/400/270
	Heating			530/460/380/270	600/510/410/270	650/540/430/270
Net Dimensions			mm	600 × 740 × 200	600 × 740 × 200	600 × 740 × 200
Weight			kg	14	14	14
Connection Pipe Diameter		Liquid/Gas	mm	6.35/9.52	6.35/9.52	6.35/9.52

2-unit to 5-unit Multi-split Indoor Units Specifications

Ceiling



Model name	Indoor unit			ABEG18KRTA	ABEG22KRTA
kW Class			kW	5.0	6.0
Power Source				Single phase, ~230 V, 50 Hz	
Sound Pressure Level	Cooling	H/M/L/Q	dB(A)	38/36/33/31	42/37/34/31
	Heating			38/36/33/31	42/37/34/31
Sound Power Level	Cooling	H	dB(A)	53	57
	Heating			53	57
Airflow Rate	Cooling	H/M/L/Q	m^3/h	840/790/710/650	900/790/710/650
	Heating			840/790/710/650	900/790/710/650
Net Dimensions			mm	235 × 1,080 × 705	235 × 1,080 × 705
Weight			kg	24	24
Connection Pipe Diameter		Liquid/Gas	mm	6.35/12.70	6.35/12.70

Compact Cassette Grid Type



Model name	Indoor unit			AUXG07KVLA	AUXG09KVLA	AUXG12KVLA	AUXG14KVLA	AUXG18KVLA	AUXG22KVLA
kW Class			kW	2.0	2.5	3.5	4.0	5.0	6.0
Power Source				Single phase, ~230 V, 50 Hz					
Sound Pressure Level	Cooling	H/M/L/Q	dB(A)	33/31/29/27	33/31/29/27	37/34/31/28	38/35/32/29	38/35/32/29	44/42/36/30
	Heating			34/32/29/27	34/32/29/27	37/34/31/29	43/38/34/30	43/38/34/30	45/43/40/33
Sound Power Level	Cooling	H	dB(A)	46	46	49	50	50	56
	Heating			47	47	49	55	55	57
Airflow Rate	Cooling	H/M/L/Q	m^3/h	540/490/440/390	540/490/440/390	610/530/470/410	680/580/490/410	680/580/490/410	830/740/600/450
	Heating			540/490/440/390	540/490/440/390	610/530/470/410	790/680/580/450	790/680/580/450	860/760/700/530
Net Dimensions			mm	245 × 570 × 570	245 × 570 × 570	245 × 570 × 570	245 × 570 × 570	245 × 570 × 570	245 × 570 × 570
Weight			kg	15	15	15	15	15	16
Panel				UTG-UFYF-W	UTG-UFYF-W	UTG-UFYF-W	UTG-UFYF-W	UTG-UFYF-W	UTG-UFYF-W
Connection Pipe Diameter		Liquid/Gas	mm	6.35/9.52	6.35/9.52	6.35/9.52	6.35/9.52	6.35/12.70	6.35/12.70

Mini duct

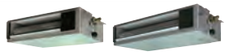

Model name	Indoor unit			ARXG07KSLAP	ARXG09KSLAP	ARXG12KSLAP	ARXG14KSLAP	ARXG18KSLAP
kW Class			kW	2.0	2.5	3.5	4.0	5.0
Power Source				Single phase, ~230 V, 50 Hz				
Sound Pressure Level	Cooling	H/M/L/Q	dB(A)	29/26/24/23	29/26/24/23	31/27/25/23	35/30/27/23	33/29/26/23
	Heating			29/26/24/23	29/26/24/23	31/27/25/23	35/30/27/23	33/29/26/23
Sound Power Level	Cooling	H	dB(A)	52	54	55	60	58
	Heating			53	56	57	62	59
Airflow Rate	Cooling	H/M/L/Q	m^3/h	550/440/390/360	600/450/400/360	650/490/430/360	800/640/530/360	940/750/540/480
	Heating			550/440/390/360	600/450/400/360	650/490/430/360	800/640/530/360	940/750/540/480
Net Dimensions			mm	198 × 700 × 450	198 × 700 × 450	198 × 700 × 450	198 × 700 × 450	198 × 900 × 450
Weight			kg	15.5	15.5	15.5	15.5	18.5
Connection Pipe Diameter		Liquid/Gas	mm	6.35/9.52	6.35/9.52	6.35/9.52	6.35/9.52	6.35/12.70
External static pressure			Pa	0 to 30	0 to 30	0 to 30	0 to 50	0 to 50
Drain pump				Standard	Standard	Standard	Standard	Standard

Slim duct



Model name	Indoor unit			ARXG07KLLAP	ARXG09KLLAP	ARXG12KLLAP	ARXG14KLLAP	ARXG18KLLAP
kW Class			kW	2.0	2.5	3.5	4.0	5.0
Power Source				Single phase, ~230 V, 50 Hz				
Sound Pressure Level	Cooling	H/M/L/Q	dB(A)	28/26/25/24	28/27/26/25	29/28/27/26	32/30/28/26	32/30/29/27
	Heating			28/26/25/24	28/26/25/24	29/28/27/24	32/30/28/25	32/30/29/27
Sound Power Level	Cooling	H	dB(A)	57	57	58	60	58
	Heating			57	57	58	60	58
Airflow Rate	Cooling	H/M/L/Q	m^3/h	550/490/470/440	600/550/500/450	650/600/550/480	800/700/600/480	940/880/820/750
	Heating			550/490/470/440	600/550/500/450	650/600/550/480	800/700/600/480	940/880/820/750
Net Dimensions			mm	198 × 700 × 620	198 × 700 × 620	198 × 700 × 620	198 × 700 × 620	198 × 900 × 620
Weight			kg	16	17	17	17	20
Connection Pipe Diameter		Liquid/Gas	mm	6.35/9.52	6.35/9.52	6.35/9.52	6.35/9.52	6.35/12.70
External static pressure			Pa	0 to 90	0 to 90	0 to 90	0 to 90	0 to 90
Drain pump				Standard	Standard	Standard	Standard	Standard

Medium Static Pressure Duct



Model name	Indoor unit			ARXH12KMTAP	ARXH14KMTAP	ARXH18KMTAP	ARXH22KMTAP
kW Class			kW	3.5	4.0	5.0	6.0
Power Source				Single-phase, ~230V, 50Hz			
Sound Pressure Level	Cooling	H/M/L/Q	dB(A)	29 / 27 / 25 / 23	32 / 29 / 27 / 25	33 / 30 / 28 / 26	32/28/25/24
	Heating			29 / 27 / 25 / 23	32 / 29 / 27 / 25	33 / 30 / 28 / 26	32/28/25/24
Sound Power Level	Cooling	H	dB(A)	58	59	60	58
	Heating			58	59	60	58
Airflow Rate	Cooling	H/M/L/Q	m^3/h	650 / 520 / 460 / 390	800 / 640 / 560 / 480	840 / 720 / 630 / 540	1,150 / 920 / 800 / 700
	Heating			650 / 520 / 460 / 390	800 / 640 / 560 / 480	840 / 720 / 630 / 540	1,150 / 920 / 800 / 700
Net Dimensions			mm	240 × 700 × 700	240 × 700 × 700	240 × 700 × 700	240 × 1,000 × 700
Weight			kg	24	24	24	31
Connection Pipe Diameter		Liquid/Gas	mm	6.35 / 9.52	6.35 / 9.52	6.35 / 12.7	6.35/12.70
External static pressure			Pa	30 to 150	30 to 150	30 to 150	30 to 150
Drain pump				Standard	Standard	Standard	Standard

Medium Static Pressure Duct



Model name	Indoor unit			ARXG22KMLB
kW Class			kW	6.0
Power Source				Single phase, ~230 V, 50 Hz
Sound Pressure Level	Cooling	H/M/L/Q	dB(A)	31/29/27/25
	Heating			31/29/27/25
Sound Power Level	Cooling	H	dB(A)	60
	Heating			62
Airflow Rate	Cooling	H/M/L/Q	m^3/h	1,100/910/750/580
	Heating			1,100/910/750/580
Net Dimensions			mm	270 × 1,135 × 700
Weight			kg	35
Connection Pipe Diameter		Liquid/Gas	mm	6.35/12.70
External static pressure			Pa	30 to 150
Drain pump				Option

6-unit Multi-split Indoor Units Specifications

Compact wall-mounted



Model name	Indoor unit			ASYG07LUCA	ASYG09LUCA	ASYG12LUCA	ASYG14LUCA
kW Class			kW	2.0	2.5	3.5	4.0
Power Source				Single phase, ~230 V, 50 Hz			
Sound Pressure Level	Cooling	H/M/L/Q	dB(A)	35/30/28/21	36/32/28/21	37/34/31/21	41/36/33/25
	Heating			35/30/28/21	36/32/28/21	37/34/31/21	41/36/34/27
Sound Power Level	Cooling	H	dB(A)	53	54	55	59
	Heating			53	54	55	59
Airflow Rate	Cooling	H/M/L/Q	m^3/h	570/520/470/330	600/550/470/330	660/600/530/330	710/640/570/390
	Heating			570/520/470/330	600/550/470/330	660/600/530/330	710/640/590/430
Net Dimensions			mm	282 × 870 × 185	282 × 870 × 185	282 × 870 × 185	282 × 870 × 185
Weight			kg	9.5	9.5	9.5	9.5
Connection Pipe Diameter		Liquid/Gas	mm	6.35/9.52	6.35/9.52	6.35/9.52	6.35/12.70

Wall-mounted type



Model name	Indoor unit			ASYG18LFCA	ASYG24LFCC
kW Class			kW	5.0	7.0
Power Source				Single phase, ~230 V, 50 Hz	
Sound Pressure Level	Cooling	H/M/L/Q	dB(A)	43/37/33/26	49/42/37/33
	Heating			42/37/33/25	48/42/37/33
Sound Power Level	Cooling	H	dB(A)	58	64
	Heating			58	64
Airflow Rate	Cooling	H/M/L/Q	m^3/h	900/740/620/550	1,120/900/740/620
	Heating			900/740/620/550	1,100/900/740/620
Net Dimensions			mm	320 × 998 × 238	320 × 998 × 238
Weight			kg	14	14
Connection Pipe Diameter		Liquid/Gas	mm	6.35/12.70	6.35/15.88

Compact wall-mounted



Model name	Indoor unit			ASYG07LMCE	ASYG09LMCE	ASYG12LMCE	ASYG14LMCE
kW Class			kW	2.0	2.5	3.5	4.0
Power Source				Single phase, ~230 V, 50 Hz			
Sound Pressure Level	Cooling	H/M/L/Q	dB(A)	36/32/29/21	37/33/29/21	40/36/30/21	42/38/33/25
	Heating			36/32/29/22	37/33/29/22	40/36/31/22	42/38/35/27
Sound Power Level	Cooling	H	dB(A)	51	52	54	56
	Heating			51	52	55	57
Airflow Rate	Cooling	H/M/L/Q	m^3/h	560/500/430/310	600/520/430/310	660/560/450/310	730/600/530/360
	Heating			560/500/430/330	600/520/430/330	660/560/470/330	730/615/560/375
Net Dimensions			mm	268 × 840 × 203	268 × 840 × 203	268 × 840 × 203	268 × 840 × 203
Weight			kg	8.5	8.5	8.5	8.5
Connection Pipe Diameter		Liquid/Gas	mm	6.35/9.52	6.35/9.52	6.35/9.52	6.35/12.70

Floor



Model name	Indoor unit			AGYG09LVCA	AGYG12LVCA	AGYG14LVCA
kW Class			kW	2.5	3.5	4.0
Power Source				Single phase, ~230 V, 50 Hz		
Sound Pressure Level	Cooling	H/M/L/Q	dB(A)	39/34/28/22	42/36/30/22	44/38/31/22
	Heating			39/35/30/22	42/38/32/22	44/39/33/22
Sound Power Level	Cooling	H	dB(A)	52	55	56
	Heating			52	55	56
Airflow Rate	Cooling	H/M/L/Q	m^3/h	530/440/360/270	600/490/380/270	650/520/400/270
	Heating			530/460/380/270	600/510/410/270	650/540/430/270
Net Dimensions			mm	600 × 740 × 200	600 × 740 × 200	600 × 740 × 200
Weight			kg	14	14	14
Connection Pipe Diameter		Liquid/Gas	mm	6.35/9.52	6.35/9.52	6.35/12.70

Floor ceiling



Model name	Indoor unit			ABYG14LVTA	ABYG18LVTB
kW Class			kW	4.0	5.0
Power Source				Single phase, ~230 V, 50 Hz	
Sound Pressure Level	Cooling	H/M/L/Q	dB(A)	36/34/33/29 (Under ceiling) 39/37/36/32 (Floor console)	41/38/34/32 (Under ceiling) 44/41/37/35 (Floor console)
	Heating			36/34/33/29 (Under ceiling) 39/37/36/32 (Floor console)	41/38/34/32 (Under ceiling) 44/41/37/35 (Floor console)
Sound Power Level	Cooling	H	dB(A)	51	55
	Heating			51	55
Airflow Rate	Cooling	H/M/L/Q	m^3/h	640/590/540/480	780/700/560/500
	Heating			640/590/540/480	780/700/560/500
Net Dimensions			mm	199 × 990 × 655	199 × 990 × 655
Weight			kg	27	27
Connection Pipe Diameter		Liquid/Gas	mm	6.35/12.70	6.35/12.70

Compact cassette



Model name	Indoor unit			AUYG07LVLA	AUYG09LVLA	AUYG12LVLB	AUYG14LVLB	AUYG18LVLB
kW Class			kW	2.0	2.5	3.5	4.0	5.0
Power Source				Single phase, ~230 V, 50 Hz				
Sound Pressure Level	Cooling	H/M/L/Q	dB(A)	33/31/29/27	33/31/29/27	37/33/31/28	40/35/32/29	42/37/33/29
	Heating			34/32/29/27	34/32/29/27	37/33/31/28	40/37/34/29	44/40/37/30
Sound Power Level	Cooling	H	dB(A)	46	46	49	52	54
	Heating			47	47	49	52	56
Airflow Rate	Cooling	H/M/L/Q	m^3/h	540/490/440/390	540/490/440/390	610/530/470/410	680/580/490/410	750/610/520/410
	Heating			540/490/440/390	540/490/440/390	610/530/470/410	700/620/550/430	800/710/600/450
Net Dimensions			mm	245 × 570 × 570	245 × 570 × 570	245 × 570 × 570	245 × 570 × 570	245 × 570 × 570
Weight			kg	15	15	15	15	15
Panel				UTG-UFYD-W				
Connection Pipe Diameter		Liquid/Gas	mm	6.35/9.52	6.35/9.52	6.35/9.52	6.35/12.70	6.35/12.70

Mini duct

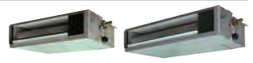

Model name	Indoor unit			ARYG07LSLAP	ARYG09LSLAP	ARYG12LSLAP	ARYG14LSLAP	ARYG18LSLAP
kW Class			kW	2.0	2.5	3.5	4.0	5.0
Power Source				Single phase, ~230 V, 50 Hz				
Sound Pressure Level	Cooling	H/M/L/Q	dB(A)	29/26/24/23	29/26/24/23	31/27/25/23	35/30/27/23	33/29/26/23
	Heating			29/26/24/23	29/26/24/23	31/27/25/23	35/30/27/23	33/29/26/23
Sound Power Level	Cooling	H	dB(A)	52	54	55	60	58
	Heating			53	56	57	62	59
Airflow Rate	Cooling	H/M/L/Q	m^3/h	550/440/390/360	600/450/400/360	650/490/430/360	800/640/530/360	940/750/540/480
	Heating			550/440/390/360	600/450/400/360	650/490/430/360	800/640/530/360	940/750/540/480
Net Dimensions			mm	198 × 700 × 450	198 × 700 × 450	198 × 700 × 450	198 × 700 × 450	198 × 900 × 450
Weight			kg	15.5				18.5
Connection Pipe Diameter		Liquid/Gas	mm	6.35/9.52			6.35/12.70	
External static pressure			Pa	0 to 30			0 to 50	
Drain pump				Standard				

Slim duct

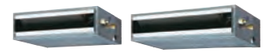

Model name	Indoor unit			ARYG07LLTA	ARYG09LLTA	ARYG12LLTB	ARYG14LLTB	ARYG18LLTB
kW Class			kW	2.0	2.5	3.5	4.0	5.0
Power Source				Single phase, ~230 V, 50 Hz				
Sound Pressure Level	Cooling	H/M/L/Q	dB(A)	28/26/25/24	28/27/26/25	29/28/27/26	32/30/28/26	32/31/30/29
	Heating			28/26/25/24	28/26/25/24	29/28/27/24	33/30/28/25	33/32/31/29
Sound Power Level	Cooling	H	dB(A)	57	57	58	60	58
	Heating			57	57	58	61	59
Airflow Rate	Cooling	H/M/L/Q	m^3/h	550/490/470/440	600/550/500/450	650/600/550/480	800/700/600/480	940/880/820/750
	Heating			550/490/470/440	600/550/500/450	650/600/550/480	800/700/600/480	940/880/820/750
Net Dimensions			mm	198 × 700 × 620	198 × 700 × 620	198 × 700 × 620	198 × 700 × 620	198 × 900 × 620
Weight			kg	17	19	19	19	23
Connection Pipe Diameter		Liquid/Gas	mm	6.35/9.52	6.35/9.52	6.35/9.52	6.35/12.7	6.35/12.70
External static pressure			Pa	0 to 90				
Drain pump				Standard				

2-unit Multi-split Combination Table–Cooling/Heating

The data in the table below shows the performance of various combinations of indoor and outdoor units of different capacities, using the most efficient type of indoor unit.
These values should not be interpreted as official declarations for tax incentives or other certifications.
For more information on specific types of indoor and outdoor unit combinations, please refer to the Design & Technical Manual.

2-unit Multi-split cooling

AOEG14KBCA2	Combination of Indoor Units		Cooling Operation							
			Cooling Capacity			Input Power (Min. - Max.)	EER	Seasonal Data		
			Unit 1	Unit 2	Total Capacity (Min. - Max.)			Pdesign	SEER	Energy efficiency class
			kW	kW	kW	kW		kW		
2-unit connection	5	5	1.50	1.50	3.00 (1.40-3.60)	0.74 (0.25-0.95)	4.03	3.0	6.8	A++
	5	7	1.50	2.00	3.50 (1.40-4.30)	0.84 (0.25-1.10)	4.15	3.5	6.8	A++
	5	9	1.50	2.50	4.00 (1.40-4.39)	1.07 (0.25-1.25)	3.75	4.0	6.8	A++
	5	12	1.18	2.82	4.00 (1.40-4.61)	1.02 (0.25-1.25)	3.92	4.0	6.8	A++
	7	7	2.00	2.00	4.00 (1.4-4.6)	0.97 (0.25-1.20)	4.12	4.0	8.7	A+++
	7	9	1.75	2.25	4.00 (1.4-4.6)	0.97 (0.25-1.20)	4.12	4.0	8.7	A+++
	7	12	1.47	2.53	4.00 (1.4-4.6)	0.97 (0.25-1.20)	4.12	4.0	8.7	A+++
	9	9	2.00	2.00	4.00 (1.4-4.6)	0.97 (0.25-1.20)	4.12	4.0	8.7	A+++
	9	12	1.71	2.29	4.00 (1.4-4.6)	0.97 (0.25-1.20)	4.12	4.0	8.7	A+++

Notes: •5: 5000 Btu/h/7: 7000 Btu/h/9: 9000 Btu/h/12: 12000 Btu/h models
•The above specifications are listed with the best combination of values selected.
•2 or more indoor units should be connected.
•Cooling capacity is determined based on 27°CDB/19°CWB (indoor temperature) and 35°CDB (outdoor temperature).
•Pipe Length: 5 m, Height difference: 0 m (Outdoor unit to Indoor unit)
•Total capacity of indoor units connected must be between 4.0 kW and 6.0 kW.
•For compatible Outer Units with 5,000BTU models, please refer to the Design & Technical Manual Part. 1-1

AOEG18KBCA2	Combination of Indoor Units		Cooling Operation							
			Cooling Capacity			Input Power (Min. - Max.)	EER	Seasonal Data		
			Unit 1	Unit 2	Total Capacity (Min. - Max.)			Pdesign	SEER	Energy efficiency class
			kW	kW	kW	kW		kW		
2-unit connection	5	5	1.50	1.50	3.00 (1.70-3.60)	0.53 (0.25-0.94)	5.65	3.0	6.9	A++
	5	7	1.50	2.00	3.50 (1.70-4.30)	0.75 (0.25-1.12)	4.65	3.5	6.9	A++
	5	9	1.50	2.50	4.00 (1.70-5.00)	0.97 (0.25-1.29)	4.10	4.0	6.9	A++
	5	12	1.41	3.39	4.80 (1.70-5.70)	1.20 (0.25-1.58)	4.00	5.0	6.7	A++
	5	14	1.32	3.68	5.00 (1.70-5.80)	1.32 (0.25-1.63)	3.78	5.0	6.7	A++
	7	7	2.00	2.00	4.00 (1.7-5.0)	0.92 (0.25-1.23)	4.35	4.0	8.8	A+++
	7	9	2.00	2.50	4.50 (1.7-5.7)	1.07 (0.25-1.45)	4.22	4.5	8.7	A+++
	7	12	1.84	3.16	5.00 (1.7-5.8)	1.24 (0.25-1.55)	4.03	5.0	8.6	A+++
	7	14	1.67	3.33	5.00 (1.7-5.8)	1.24 (0.25-1.55)	4.03	5.0	8.6	A+++
	9	9	2.50	2.50	5.00 (1.7-5.8)	1.24 (0.25-1.55)	4.03	5.0	8.6	A+++
	9	12	2.14	2.86	5.00 (1.7-5.8)	1.24 (0.25-1.55)	4.03	5.0	8.6	A+++
	9	14	1.96	3.04	5.00 (1.7-5.8)	1.24 (0.25 - 1.55)	4.03	5.0	8.6	A+++
	12	12	2.50	2.50	5.00 (1.7-5.8)	1.24 (0.25-1.55)	4.03	5.0	8.6	A+++
	12	14	2.31	2.69	5.00 (1.7-5.8)	1.24 (0.25-1.55)	4.03	5.0	8.6	A+++

Notes: •5: 5000 Btu/h/7: 7000 Btu/h/9:9000 Btu/h/12: 12000 Btu/h/14: 14000 Btu/h models
•The above specifications are listed with the best combination of values selected.
•2 or more indoor units should be connected.
•Cooling capacity is determined based on 27°CDB/19°CWB (indoor temperature) and 35°CDB (outdoor temperature).
•Pipe Length: 5 m, Height difference: 0 m (Outdoor unit to Indoor unit)
•Total capacity of indoor units connected must be between 4.0 kW and 7.5 kW.
•For compatible Outer Units with 5,000BTU models, please refer to the Design & Technical Manual Part. 1-1

2-unit Multi-split heating

AOEG14KBCA2	Combination of Indoor Units		Heating Operation							
			Heating Capacity			Input Power (Min. - Max.)	COP	Seasonal Data		
			Unit 1	Unit 2	Total Capacity (Min. - Max.)			Pdesign	SCOP	Energy efficiency class
			kW	kW	kW	kW		kW		
2-unit connection	5	5	1.80	1.80	3.60 (1.10-4.20)	0.80 (0.25-1.25)	4.52	2.9	4.08	A+
	5	7	1.67	2.33	4.00 (1.10-4.80)	0.92 (0.25-1.50)	4.36	3.4	4.1	A+
	5	9	1.57	2.83	4.40 (1.10-5.10)	1.06 (0.25-1.70)	4.16	3.5	4.1	A+
	5	12	1.29	3.11	4.40 (1.10-5.40)	1.01 (0.25-1.70)	4.34	3.5	4.1	A+
	7	7	2.20	2.20	4.40 (1.1-5.5)	0.95 (0.25-1.65)	4.63	3.5	4.7	A++
	7	9	1.92	2.48	4.40 (1.1-5.5)	0.95 (0.25-1.65)	4.63	3.5	4.7	A++
	7	12	1.62	2.78	4.40 (1.1-5.5)	0.95 (0.25-1.65)	4.63	3.5	4.7	A++
	9	9	2.20	2.20	4.40 (1.1-5.5)	0.95 (0.25-1.65)	4.63	3.5	4.7	A++
	9	12	1.89	2.51	4.40 (1.1-5.5)	0.95 (0.25-1.65)	4.63	3.5	4.7	A++

Notes: •5: 5000 Btu/h/7: 7000 Btu/h/9: 9000 Btu/h/12: 12000 Btu/h models
•The above specifications are listed with the best combination of values selected.
•2 or more indoor units should be connected.
•Heating capacity is determined based on 20°CDB (indoor temperature) and 7°CDB/6°CWB (outdoor temperature).
•Pipe Length: 5 m, Height difference: 0 m (Outdoor unit to Indoor unit)
•Total capacity of indoor units connected must be between 4.0 kW and 6.0 kW.
•For compatible Outer Units with 5,000BTU models, please refer to the Design & Technical Manual Part. 1-1

AOEG18KBCA2	Combination of Indoor Units		Heating Operation							
			Heating Capacity			Input Power (Min. - Max.)	COP	Seasonal Data		
			Unit 1	Unit 2	Total Capacity (Min. - Max.)			Pdesign	SCOP	Energy efficiency class
			kW	kW	kW	kW		kW		
2-unit connection	5	5	1.80	1.80	3.60 (1.70-4.20)	0.80 (0.25-0.94)	4.50	2.9	4.1	A+
	5	7	1.80	2.40	4.20 (1.70-4.90)	0.92 (0.25-1.18)	4.54	3.4	4.1	A+
	5	9	1.80	3.00	4.80 (1.70-5.60)	1.05 (0.25-1.41)	4.57	3.8	4.1	A+
	5	12	1.59	3.81	5.40 (1.70-6.40)	1.24 (0.25-1.76)	4.36	4.2	4.0	A+
	5	14	1.47	4.13	5.60 (1.70-6.60)	1.30 (0.25-1.88)	4.30	4.2	4.0	A+
	7	7	2.40	2.40	4.80 (1.7-5.6)	0.99 (0.25-1.35)	4.85	3.8	4.7	A++
	7	9	2.40	3.00	5.40 (1.7-6.4)	1.15 (0.25-1.60)	4.70	4.0	4.7	A++
	7	12	2.06	3.54	5.60 (1.7-7.0)	1.22 (0.25-1.80)	4.59	4.2	4.7	A++
	7	14	1.87	3.73	5.60 (1.7-7.0)	1.22 (0.25-1.80)	4.59	4.2	4.7	A++
	9	9	2.80	2.80	5.60 (1.7-7.0)	1.22 (0.25-1.80)	4.59	4.2	4.7	A++
	9	12	2.40	3.20	5.60 (1.7-7.0)	1.22 (0.25-1.80)	4.59	4.2	4.7	A++
	9	14	2.19	3.41	5.60 (1.7-7.0)	1.22 (0.25-1.80)	4.59	4.2	4.7	A++
	12	12	2.80	2.80	5.60 (1.7-7.0)	1.22 (0.25-1.80)	4.59	4.2	4.7	A++
	12	14	2.58	3.02	5.60 (1.7-7.0)	1.22 (0.25-1.80)	4.59	4.2	4.7	A++

Notes: •5: 5000 Btu/h/7: 7000 Btu/h/9:9000 Btu/h/12: 12000 Btu/h/14: 14000 Btu/h models
•The above specifications are listed with the best combination of values selected.
•2 or more indoor units should be connected.
•Heating capacity is determined based on 20°CDB (indoor temperature) and 7°CDB/6°CWB (outdoor temperature).
•Pipe Length: 5 m, Height difference: 0 m (Outdoor unit to Indoor unit)
•Total capacity of indoor units connected must be between 4.0 kW and 7.5 kW.
•For compatible Outer Units with 5,000BTU models, please refer to the Design & Technical Manual Part. 1-1

3-unit Multi-split Combination Table–Cooling/Heating

The data in the table below shows the performance of various combinations of indoor and outdoor units of different capacities, using the most efficient type of indoor unit.
These values should not be interpreted as official declarations for tax incentives or other certifications.
For more information on specific types of indoor and outdoor unit combinations, please refer to the Design & Technical Manual.

REFRIGERANT R32

3-unit Multi-split cooling

AOEG18KBCA3	Combination of Indoor Units			Cooling Operation								
				Cooling Capacity				Input Power (Min. - Max.)	EER	Seasonal Data		
				Unit 1	Unit 2	Unit 3	Total Capacity (Min. - Max.)			Pdesign	SEER	Energy efficiency
				kW	kW	kW	kW	kW		kW		
2-unit connection	5	9	-	1.50	2.50	-	4.00 (1.80-5.00)	0.88 (0.43-1.37)	4.55	4.0	6.7	A++
	5	12	-	1.41	3.39	-	4.80 (1.80-6.10)	1.11 (0.43-1.65)	4.32	5.0	6.5	A++
	5	14	-	1.42	3.98	-	5.40 (1.80-6.40)	1.39 (0.43-1.83)	3.88	5.4	6.4	A++
	7	7	-	2.00	2.00	-	4.00 (1.80-5.00)	0.86 (0.35-1.35)	4.65	4.0	8.3	A++
	7	9	-	2.00	2.50	-	4.50 (1.80-5.70)	1.03 (0.35-1.50)	4.36	4.5	8.2	A++
	7	12	-	1.99	3.41	-	5.40 (1.80-6.80)	1.41 (0.35-1.81)	3.83	5.4	8.0	A++
	7	14	-	1.80	3.60	-	5.40 (1.80-7.00)	1.41 (0.35-1.90)	3.83	5.4	8.0	A++
	9	9	-	2.50	2.50	-	5.00 (1.80-6.40)	1.23 (0.35-1.70)	4.06	5.0	8.1	A++
	9	12	-	2.31	3.09	-	5.40 (1.80-7.00)	1.41 (0.35-1.90)	3.83	5.4	8.0	A++
	9	14	-	2.11	3.29	-	5.40 (1.80-7.00)	1.41 (0.35-1.90)	3.83	5.4	8.0	A++
	12	12	-	2.70	2.70	-	5.40 (1.80-7.00)	1.41 (0.35-1.90)	3.83	5.4	8.0	A++
	12	14	-	2.49	2.91	-	5.40 (1.80-7.00)	1.41 (0.35-1.90)	3.83	5.4	8.0	A++
	14	14	-	2.70	2.70	-	5.40 (1.80-7.00)	1.41 (0.35-1.90)	3.83	5.4	8.0	A++
3-unit connection	5	5	5	1.50	1.50	1.50	4.50 (1.80-5.40)	0.68 (0.43-1.46)	6.65	4.5	7.1	A++
	5	5	7	1.41	1.41	1.98	4.80 (1.80-6.10)	0.83 (0.43-1.65)	5.78	5.0	7.0	A++
	5	5	9	1.42	1.42	2.56	5.40 (1.80-6.80)	0.98 (0.43-1.83)	5.49	5.4	6.9	A++
	5	5	12	1.23	1.23	2.95	5.40 (1.80-7.00)	1.14 (0.43-1.91)	4.74	5.4	6.9	A++
	5	5	14	1.13	1.13	3.15	5.40 (1.80-7.00)	1.14 (0.43-1.91)	4.74	5.4	6.9	A++
	5	7	7	1.42	1.99	1.99	5.40 (1.80-6.80)	0.98 (0.43-1.83)	5.49	5.4	6.9	A++
	5	7	9	1.29	1.80	2.31	5.40 (1.80-7.00)	1.14 (0.43-1.91)	4.74	5.4	6.9	A++
	5	7	12	1.13	1.58	2.70	5.40 (1.80-7.00)	1.14 (0.43-1.91)	4.74	5.4	6.9	A++
	5	7	14	1.04	1.45	2.91	5.40 (1.80-7.00)	1.14 (0.43-1.91)	4.74	5.4	6.9	A++
	5	9	9	1.17	2.11	2.11	5.40 (1.80-7.00)	1.14 (0.43-1.91)	4.74	5.4	6.9	A++
	5	9	12	1.04	1.87	2.49	5.40 (1.80-7.00)	1.14 (0.43-1.91)	4.74	5.4	6.9	A++
	5	9	14	0.96	1.74	2.70	5.40 (1.80-7.00)	1.14 (0.43-1.91)	4.74	5.4	6.9	A++
	5	12	12	0.93	2.23	2.23	5.40 (1.80-7.00)	1.14 (0.43-1.91)	4.74	5.4	6.9	A++
	7	7	7	1.80	1.80	1.80	5.40 (1.80-7.00)	1.13 (0.35-1.90)	4.78	5.4	8.6	A+++
	7	7	9	1.64	1.64	2.12	5.40 (1.80-7.00)	1.13 (0.35-1.90)	4.78	5.4	8.6	A+++
	7	7	12	1.45	1.45	2.50	5.40 (1.80-7.00)	1.13 (0.35-1.90)	4.78	5.4	8.6	A+++
	7	7	14	1.35	1.35	2.70	5.40 (1.80-7.00)	1.13 (0.35-1.90)	4.78	5.4	8.6	A+++
	7	9	9	1.52	1.94	1.94	5.40 (1.80-7.00)	1.13 (0.35-1.90)	4.78	5.4	8.6	A+++
	7	9	12	1.35	1.74	2.31	5.40 (1.80-7.00)	1.13 (0.35-1.90)	4.78	5.4	8.6	A+++
	7	9	14	1.26	1.62	2.52	5.40 (1.80-7.00)	1.13 (0.35-1.90)	4.78	5.4	8.6	A+++
	9	9	9	1.80	1.80	1.80	5.40 (1.80-7.00)	1.13 (0.35-1.90)	4.78	5.4	8.6	A+++
	9	9	12	1.62	1.62	2.16	5.40 (1.80-7.00)	1.13 (0.35-1.90)	4.78	5.4	8.6	A+++

AOEG24KBCA3	Combination of Indoor Units			Cooling Operation							
				Cooling Capacity				Input Power (Min. - Max.)	EER	Seasonal Data	
				Unit 1	Unit 2	Unit 3	Total Capacity (Min. - Max.)			Pdesign	Energy efficiency
				kW	kW	kW	kW	kW		kW	
2-unit connection	5	9	-	1.50	2.50	-	4.00 (1.80-5.00)	0.90 (0.43-1.39)	4.44	4.0	A++
	5	12	-	1.38	3.32	-	4.70 (1.80-6.10)	1.27 (0.43-1.77)	3.70	4.7	A++
	5	14	-	1.50	4.00	-	5.50 (1.80-6.80)	1.61 (0.43-2.00)	3.42	5.5	A++
	5	18	-	1.50	5.00	-	6.50 (1.80-7.90)	2.10 (0.43-2.52)	3.10	6.5	A
	7	7	-	2.00	2.00	-	4.00 (1.80-5.00)	0.86 (0.35-1.35)	4.65	4.0	A++
	7	9	-	2.00	2.50	-	4.50 (1.80-5.70)	1.03 (0.35-1.54)	4.36	4.5	A++
	7	12	-	2.00	3.50	-	5.50 (1.80-6.80)	1.46 (0.35-1.85)	3.77	5.5	A++
	7	14	-	2.00	4.00	-	6.00 (1.80-7.50)	1.73 (0.35-2.20)	3.48	6.0	A++
	7	18	-	1.90	4.90	-	6.80 (1.80-8.50)	2.26 (0.35-2.65)	3.01	6.8	A++
	9	9	-	2.50	2.50	-	5.00 (1.80-6.40)	1.23 (0.35-1.74)	4.06	5.0	A++
	9	12	-	2.50	3.50	-	6.00 (1.80-7.50)	1.73 (0.35-2.20)	3.48	6.0	A++
	9	14	-	2.50	4.00	-	6.50 (1.80-8.20)	2.04 (0.35-2.46)	3.19	6.5	A++
	9	18	-	2.27	4.53	-	6.80 (1.80-8.50)	2.26 (0.35-2.65)	3.01	6.8	A++
	12	12	-	3.40	3.40	-	6.80 (1.80-8.50)	2.26 (0.35-2.65)	3.01	6.8	A++
	12	14	-	3.14	3.66	-	6.80 (1.80-8.50)	2.26 (0.35-2.65)	3.01	6.8	A++
	12	18	-	2.72	4.08	-	6.80 (1.80-8.50)	2.26 (0.35-2.65)	3.01	6.8	A++
	14	14	-	3.40	3.40	-	6.80 (1.80-8.50)	2.26 (0.35-2.65)	3.01	6.8	A++
	14	18	-	2.98	3.82	-	6.80 (1.80-8.50)	2.26 (0.35-2.65)	3.01	6.8	A++
3-unit connection	5	5	5	1.43	1.43	1.43	4.30 (1.80-5.40)	0.77 (0.43-1.52)	5.58	4.5	A++
	5	5	7	1.38	1.38	1.94	4.70 (1.80-6.10)	0.99 (0.43-1.77)	4.75	5.0	A++
	5	5	9	1.50	1.50	2.50	5.50 (1.80-6.80)	1.21 (0.43-2.00)	4.55	5.5	A++
	5	5	12	1.43	1.43	3.44	6.30 (1.80-7.90)	1.54 (0.43-2.26)	4.09	6.5	A++
	5	5	14	1.42	1.42	3.97	6.80 (1.80-8.50)	1.76 (0.43-2.67)	3.86	6.8	A++
	5	5	18	1.21	1.21	4.37	6.80 (1.80-8.50)	1.76 (0.43-2.67)	3.86	6.8	A++
	5	7	7	1.50	2.00	2.00	5.50 (1.80-6.80)	1.21 (0.43-2.00)	4.55	5.5	A++
	5	7	9	1.50	2.00	2.50	6.00 (1.80-7.50)	1.43 (0.43-2.26)	4.20	6.0	A++
	5	7	12	1.42	1.98	3.40	6.80 (1.80-8.50)	1.76 (0.43-2.67)	3.86	6.8	A++
	5	7	14	1.31	1.83	3.66	6.80 (1.80-8.50)	1.76 (0.43-2.67)	3.86	6.8	A++
	5	7	18	1.13	1.59	4.08	6.80 (1.80-8.50)	1.76 (0.43-2.67)	3.86	6.8	A++
	5	9	9	1.50	2.50	2.50	6.50 (1.80-8.20)	1.65 (0.43-2.52)	3.94	6.5	A++
	5	9	12	1.31	2.35	3.14	6.80 (1.80-8.50)	1.76 (0.43-2.67)	3.86	6.8	A++
	5	9	14	1.21	2.19	3.40	6.80 (1.80-8.50)	1.76 (0.43-2.67)	3.86	6.8	A++
	5	9	18	1.06	1.91	3.83	6.80 (1.80-8.50)	1.76 (0.43-2.67)	3.86	6.8	A++
	5	12	12	1.17	2.81	2.81	6.80 (1.80-8.50)	1.76 (0.43-2.67)	3.86	6.8	A++
	5	12	14	1.10	2.63	3.07	6.80 (1.80-8.50)	1.76 (0.43-2.67)	3.86	6.8	A++
	5	12	18	0.97	2.33	3.50	6.80 (1.80-8.50)	1.76 (0.43-2.67)	3.86	6.8	A++
	5	14	14	1.03	2.88	2.88	6.80 (1.80-8.50)	1.76 (0.43-2.67)	3.86	6.8	A++
	7	7	7	2.00	2.00	2.00	6.00 (1.80-7.50)	1.37 (0.35-2.20)	4.37	6.0	A+++
	7	7	9	2.00	2.00	2.50	6.50 (1.80-8.20)	1.59 (0.35-2.46)	4.08	6.5	A+++
	7	7	12	1.83	1.83	3.14	6.80 (1.80-8.50)	1.74 (0.35-2.65)	3.90	6.8	A+++
	7	7	14	1.70	1.70	3.40	6.80 (1.80-8.50)	1.74 (0.35-2.65)	3.90	6.8	A+++
	7	7	18	1.49	1.49	3.82	6.80 (1.80-8.50)	1.74 (0.35-2.65)	3.90	6.8	A+++
	7	9	9	1.90	2.45	2.45	6.80 (1.80-8.50)	1.74 (0.35-2.65)	3.90	6.8	A+++
	7	9	12	1.70	2.19	2.91	6.80 (1.80-8.50)	1.74 (0.35-2.65)	3.90	6.8	A+++
	7	9	14	1.59	2.04	3.17	6.80 (1.80-8.50)	1.74 (0.35-2.65)	3.90	6.8	A+++
	7	9	18	1.40	1.80	3.60	6.80 (1.80-8.50)	1.74 (0.35-2.65)	3.90	6.8	A+++
	7	12	12	1.54	2.63	2.63	6.80 (1.80-8.50)	1.74 (0.35-2.65)	3.90	6.8	A+++
	7	12	14	1.44	2.47	2.89	6.80 (1.80-8.50)	1.74 (0.35-2.65)	3.90	6.8	A+++
	7	14	14	1.36	2.72	2.72	6.80 (1.80-8.50)	1.74 (0.35-2.65)	3.90	6.8	A+++
	9	9	9	2.27	2.27	2.27	6.80 (1.80-8.50)	1.74 (0.35-2.65)	3.90	6.8	A+++
	9	9	12	2.04	2.04	2.72	6.80 (1.80-8.50)	1.74 (0.35-2.65)	3.90	6.8	A+++
	9	9	14	1.91	1.91	2.98	6.80 (1.80-8.50)	1.74 (0.35-2.65)	3.90	6.8	A+++
	9	9	18	1.70	1.70	3.40	6.80 (1.80-8.50)	1.74 (0.35-2.65)	3.90	6.8	A+++
	9	12	12	1.86	2.47	2.47	6.80 (1.80-8.50)	1.74 (0.35-2.65)	3.90	6.8	A+++
	9	12	14	1.75	2.33	2.72	6.80 (1.80-8.50)	1.74 (0.35-2.65)	3.90	6.8	A+++
	12	12	12	2.27	2.27	2.27	6.80 (1.80-8.50)	1.74 (0.35-2.65)	3.90	6.8	A+++

Notes: •5: 5000 Btu/h/7: 7000 Btu/h/9: 9000 Btu/h/12: 12000 Btu/h/14: 14000 Btu/h/18: 18000 Btu/h models
•The above specifications are listed with the best combination of values selected.
•2 or more indoor units should be connected.
•Cooling capacity is determined based on 27°CDB/19°CWB (indoor temperature) and 35°CDB (outdoor temperature).
•Pipe Length: 5 m, Height difference: 0 m (Outdoor unit to Indoor unit)
•Total capacity of indoor units connected must be between 4.0 kW and 10.5 kW.
•For compatible Outer Units with 5,000BTU models, please refer to the Design & Technical Manual Part. 1-1

3-unit Multi-split heating

AOEG18KBCA3	Combination of Indoor Units			Heating Operation								
				Heating Capacity				Input Power (Min. - Max.)	COP	Seasonal Data		
				Unit 1	Unit 2	Unit 3	Total Capacity (Min. - Max.)			Pdesign	SCOP	Energy efficiency
				kW	kW	kW	kW	kW		kW		
2-unit connection	5	9	-	1.80	3.00	-	4.80 (2.00-5.60)	1.04 (0.30-1.34)	4.61	4.0	4.0	A+
	5	12	-	1.80	4.20	-	6.00 (2.00-6.90)	1.35 (0.30-1.56)	4.43	4.5	3.9	A
	5	14	-	1.80	4.80	-	6.60 (2.00-7.40)	1.64 (0.30-1.77)	4.02	5.0	3.8	A
	7	7	-	2.40	2.40	-	4.80 (2.00-5.60)	1.00 (0.25-1.30)	4.80	4.0	4.2	A+
	7	9	-	2.40	3.00	-	5.40 (2.00-6.40)	1.21 (0.25-1.48)	4.45	4.0	4.2	A+
	7	12	-	2.40	4.20	-	6.60 (2.00-7.60)	1.66 (0.25-1.76)	3.98	5.0	4.0	A+
	7	14	-	2.27	4.53	-	6.80 (2.00-8.00)	1.77 (0.25-1.85)	3.84	5.0	4.0	A+
	9	9	-	3.00	3.00	-	6.00 (2.00-7.20)	1.44 (0.25-1.67)	4.17	4.5	4.1	A+
	9	12	-	2.91	3.89	-	6.80 (2.00-8.00)	1.77 (0.25-1.85)	3.84	5.0	4.0	A+
	9	14	-	2.66	4.14	-	6.80 (2.00-8.00)	1.77 (0.25-1.85)	3.84	5.0	4.0	A+
	12	12	-	3.40	3.40	-	6.80 (2.00-8.00)	1.77 (0.25-1.85)	3.84	5.0	4.0	A+
	12	14	-	3.14	3.66	-	6.80 (2.00-8.00)	1.77 (0.25-1.85)	3.84	5.0	4.0	A+
	14	14	-	3.40	3.40	-	6.80 (2.00-8.00)	1.77 (0.25-1.85)	3.84	5.0	4.0	A+
3-unit connection	5	5	5	1.70	1.70	1.70	5.10 (2.00-6.00)	0.76 (0.30-1.41)	6.68	4.0	4.3	A+
	5	5	7	1.80	1.80	2.40	6.00 (2.00-6.80)	0.97 (0.30-1.56)	6.17	4.5	4.2	A+
	5	5	9	1.80	1.80	3.00	6.60 (2.00-7.60)	1.18 (0.30-1.77)	5.58	5.0	4.1	A+
	5	5	12	1.50	1.50	3.80	6.80 (2.00-8.00)	1.39 (0.30-1.85)	4.89	5.0	4.1	A+
	5	5	14	1.42	1.42	3.97	6.80 (2.00-8.00)	1.39 (0.30-1.85)	4.89	5.0	4.1	A+
	5	7	7	1.80	2.40	2.40	6.60 (2.00-7.60)	1.18 (0.30-1.77)	5.58	5.0	4.1	A+
	5	7	9	1.50	2.30	3.00	6.80 (2.00-8.00)	1.39 (0.30-1.85)	4.89	5.0	4.1	A+
	5	7	12	1.38	1.93	3.30	6.60 (2.00-8.00)	1.39 (0.30-1.85)	4.74	5.0	4.1	A+
	5	7	14	1.31	1.83	3.66	6.80 (2.00-8.00)	1.39 (0.30-1.85)	4.89	5.0	4.1	A+
	5	9	9	1.48	2.66	2.66	6.80 (2.00-8.00)	1.39 (0.30-1.85)	4.89	5.0	4.1	A+
	5	9	12	1.27	2.28	3.05	6.60 (2.00-8.00)	1.39 (0.30-1.85)	4.74	5.0	4.1	A+
	5	9	14	1.21	2.19	3.40	6.80 (2.00-8.00)	1.39 (0.30-1.85)	4.89	5.0	4.1	A+
	5	12	12	1.14	2.73	2.73	6.60 (2.00-8.00)	1.39 (0.30-1.85)	4.74	5.0	4.1	A+
	7	7	7	2.27	2.27	2.27	6.80 (2.00-8.00)	1.39 (0.25-1.85)	4.89	5.0	4.7	A++
	7	7	9	2.07	2.07	2.66	6.80 (2.00-8.00)	1.39 (0.25-1.85)	4.89	5.0	4.7	A++
	7	7	12	1.83	1.83	3.14	6.80 (2.00-8.00)	1.39 (0.25-1.85)	4.89	5.0	4.7	A++
	7	7	14	1.70	1.70	3.40	6.80 (2.00-8.00)	1.39 (0.25-1.85)	4.89	5.0	4.7	A++
	7	9	9	1.90	2.45	2.45	6.80 (2.00-8.00)	1.39 (0.25-1.85)	4.89	5.0	4.7	A++
	7	9	12	1.70	2.19	2.91	6.80 (2.00-8.00)	1.39 (0.25-1.85)	4.89	5.0	4.7	A++
	7	9	14	1.59	2.04	3.17	6.80 (2.00-8.00)	1.39 (0.25-1.85)	4.89	5.0	4.7	A++
	9	9	9	2.27	2.27	2.27	6.80 (2.00-8.00)	1.39 (0.25-1.85)	4.89	5.0	4.7	A++
	9	9	12	2.04	2.04	2.72	6.80 (2.00-8.00)	1.39 (0.25-1.85)	4.89	5.0	4.7	A++

AOEG24KBCA3	Combination of Indoor Units			Heating Operation								
				Heating Capacity				Input Power (Min. - Max.)	COP	Seasonal Data		
				Unit 1	Unit 2	Unit 3	Total Capacity (Min. - Max.)			Pdesign	SCOP	Energy efficiency
				kW	kW	kW	kW	kW		kW		
2-unit connection	5	9	-	1.80	3.00	-	4.80 (2.00-5.60)	1.06 (0.30-1.36)	4.53	4.0	4.0	A+
	5	12	-	1.68	4.02	-	5.70 (2.00-6.80)	1.38 (0.30-1.70)	4.12	4.5	3.9	A
	5	14	-	1.80	4.80	-	6.60 (2.00-7.60)	1.78 (0.30-1.89)	3.71	5.0	3.8	A
	5	18	-	1.67	6.03	-	7.70 (2.00-8.60)	2.03 (0.30-2.37)	3.79	5.8	3.8	A
	7	7	-	2.40	2.40	-	4.80 (2.00-5.60)	1.00 (0.25-1.30)	4.80	4.0	4.2	A+
	7	9	-	2.40	3.00	-	5.40 (2.00-6.40)	1.21 (0.25-1.48)	4.45	4.0	4.2	A+
	7	12	-	2.40	4.20	-	6.60 (2.00-7.60)	1.66 (0.25-1.76)	3.98	5.0	4.0	A+
	7	14	-	2.40	4.80	-	7.20 (2.00-8.40)	1.86 (0.25-2.07)	3.87	5.4	4.0	A+
	7	18	-	2.16	5.54	-	7.70 (2.00-9.20)	2.01 (0.25-2.35)	3.83	5.8	4.0	A+
	9	9	-	3.00	3.00	-	6.00 (2.00-7.20)	1.44 (0.25-1.67)	4.17	4.5	4.1	A+
	9	12	-	3.00	4.20	-	7.20 (2.00-8.40)	1.86 (0.25-2.07)	3.87	5.4	4.0	A+
	9	14	-	2.96	4.74	-	7.70 (2.00-9.20)	2.01 (0.25-2.35)	3.83	5.8	4.0	A+
	9	18	-	2.57	5.13	-	7.70 (2.00-9.20)	2.01 (0.25-2.35)	3.83	5.8	4.0	A+
	12	12	-	3.85	3.85	-	7.70 (2.00-9.20)	2.01 (0.25-2.35)	3.83	5.8	4.0	A+
	12	14	-	3.55	4.15	-	7.70 (2.00-9.20)	2.01 (0.25-2.35)	3.83	5.8	4.0	A+
	12	18	-	3.08	4.62	-	7.70 (2.00-9.20)	2.01 (0.25-2.35)	3.83	5.8	4.0	A+
	14	14	-	3.85	3.85	-	7.70 (2.00-9.20)	2.01 (0.25-2.35)	3.83	5.8	4.0	A+
	14	18	-	3.37	4.33	-	7.70 (2.00-9.20)	2.01 (0.25-2.35)	3.83	5.8	4.0	A+
3-unit connection	5	5	5	1.70	1.70	1.70	5.10 (2.00-6.00)	1.23 (0.30-1.47)	4.16	4.0	4.2	A+
	5	5	7	1.68	1.68	2.35	5.70 (2.00-6.80)	1.37 (0.30-1.70)	4.17	4.5	4.1	A+
	5	5	9	1.80	1.80	3.00	6.60 (2.00-7.60)	1.51 (0.30-1.89)	4.38	5.0	4.1	A+
	5	5	12	1.70	1.70	4.09	7.50 (2.00-8.80)	1.72 (0.30-2.26)	4.37	5.8	3.9	A
	5	5	14	1.67	1.67	4.67	8.00 (2.00-9.20)	1.84 (0.30-2.37)	4.35	5.9	3.9	A
	5	5	18	1.43	1.43	5.14	8.00 (2.00-9.20)	1.84 (0.30-2.37)	4.34	6.0	3.9	A
	5	7	7	1.80	2.40	2.40	6.60 (2.00-7.60)	1.51 (0.30-1.89)	4.38	5.0	4.1	A+
	5	7	9	1.80	1.80	3.00	7.20 (2.00-8.40)	1.65 (0.30-2.11)	4.37	5.4	4.0	A+
	5	7	[illegible]	1.67	2.33	4.00	8.00 (2.00-9.20)	1.84 (0.30-2.37)	4.35	6.0	3.9	A
	5	7	14	1.54	2.15	4.31	8.00 (2.00-9.20)	1.84 (0.30-2.37)	4.35	6.0	3.9	A
	5	7	18	1.33	1.87	4.80	8.00 (2.00-9.20)	1.84 (0.30-2.37)	4.34	6.0	3.9	A
	5	9	9	1.80	3.00	3.00	7.80 (2.00-9.20)	1.79 (0.30-2.37)	4.36	5.8	3.9	A
	5	9	12	1.54	2.77	3.69	8.00 (2.00-9.20)	1.84 (0.30-2.37)	4.35	6.0	3.9	A
	5	9	14	1.43	2.57	4.00	8.00 (2.00-9.20)	1.84 (0.30-2.37)	4.35	6.0	3.9	A
	5	9	18	1.25	2.25	4.50	8.00 (2.00-9.20)	1.84 (0.30-2.37)	4.34	6.0	3.9	A
	5	12	12	1.38	3.31	3.31	8.00 (2.00-9.20)	1.84 (0.30-2.37)	4.35	6.0	3.9	A
	5	12	14	1.29	3.10	3.61	8.00 (2.00-9.20)	1.84 (0.30-2.37)	4.35	6.0	3.9	A
	5	12	18	1.14	2.74	4.11	8.00 (2.00-9.20)	1.84 (0.30-2.37)	4.34	6.0	3.9	A
	5	14	14	1.21	3.39	3.39	8.00 (2.00-9.20)	1.84 (0.30-2.37)	4.35	6.0	3.9	A
	7	7	7	2.40	2.40	2.40	7.20 (2.00-8.40)	1.61 (0.25-2.07)	4.48	5.4	4.7	A++
	7	7	9	2.40	2.40	3.00	7.80 (2.00-9.20)	1.76 (0.25-2.35)	4.42	5.8	4.6	A++
	7	7	12	2.15	2.15	3.70	8.00 (2.00-9.20)	1.82 (0.25-2.35)	4.40	6.0	4.6	A++
	7	7	14	2.00	2.00	4.00	8.00 (2.00-9.20)	1.82 (0.25-2.35)	4.40	6.0	4.6	A++
	7	7	18	1.75	1.75	4.50	8.00 (2.00-9.20)	1.82 (0.25-2.35)	4.40	6.0	4.6	A++
	7	9	9	2.24	2.88	2.88	8.00 (2.00-9.20)	1.82 (0.25-2.35)	4.40	6.0	4.6	A++
	7	9	12	2.00	2.57	3.43	8.00 (2.00-9.20)	1.82 (0.25-2.35)	4.40	6.0	4.6	A++
	7	9	14	1.87	2.40	3.73	8.00 (2.00-9.20)	1.82 (0.25-2.35)	4.40	6.0	4.6	A++
	7	9	18	1.65	2.12	4.23	8.00 (2.00-9.20)	1.82 (0.25-2.35)	4.40	6.0	4.6	A++
	7	12	12	1.80	3.10	3.10	8.00 (2.00-9.20)	1.82 (0.25-2.35)	4.40	6.0	4.6	A++
	7	12	14	1.70	2.91	3.39	8.00 (2.00-9.20)	1.82 (0.25-2.35)	4.40	6.0	4.6	A++
	7	14	14	1.60	3.20	3.20	8.00 (2.00-9.20)	1.82 (0.25-2.35)	4.40	6.0	4.6	A++
	9	9	9	2.67	2.67	2.67	8.00 (2.00-9.20)	1.82 (0.25-2.35)	4.40	6.0	4.6	A++
	9	9	12	2.40	2.40	3.20	8.00 (2.00-9.20)	1.82 (0.25-2.35)	4.40	6.0	4.6	A++
	9	9	14	2.25	2.25	3.50	8.00 (2.00-9.20)	1.82 (0.25-2.35)	4.40	6.0	4.6	A++
	9	9	18	2.00	2.00	4.00	8.00 (2.00-9.20)	1.82 (0.25-2.35)	4.40	6.0	4.6	A++
	9	12	12	2.18	2.91	2.91	8.00 (2.00-9.20)	1.82 (0.25-2.35)	4.40	6.0	4.6	A++
	9	12	14	2.06	2.74	3.20

4-unit Multi-split Combination Table–Cooling

The data in the table below shows the performance of various combinations of indoor and outdoor units of different capacities, using the most efficient type of indoor unit.
These values should not be interpreted as official declarations for tax incentives or other certifications.
For more information on specific types of indoor and outdoor unit combinations, please refer to the Design & Technical Manual.

4-unit Multi-split cooling

AOEG30KBTA4	Combination of Indoor Units				Cooling Operation									
					Cooling Capacity					Input Power (Min. - Max.)	EER	Seasonal Data		
					Unit 1	Unit 2	Unit 3	Unit 4	Total Capacity (Min. - Max.)			Pdesign	SEER	Energy efficiency
					kW	kW	kW	kW	kW	kW		kW		
2-unit connection	5	22	-	-	1.50	6.00	-	-	7.50 (2.40-9.40)	2.50 (0.45-3.00)	3.00	7.5	6.0	A+
	5	24	-	-	1.38	6.62	-	-	8.00 (2.40-9.50)	2.72 (0.45-3.30)	2.94	8.0	5.9	A+
	7	22	-	-	2.00	6.00	-	-	8.00 (2.4-10.1)	2.67 (0.45-3.25)	3.00	8.0	7.5	A++
	7	24	-	-	1.81	6.19	-	-	8.00 (2.4-10.1)	2.67 (0.45-3.25)	3.00	8.0	7.5	A++
	9	22	-	-	2.32	5.68	-	-	8.00 (2.4-10.1)	2.67 (0.45-3.25)	3.00	8.0	7.5	A++
	9	24	-	-	2.18	5.82	-	-	8.00 (2.4-10.1)	2.67 (0.45-3.25)	3.00	8.0	7.5	A++
	12	18	-	-	3.20	4.80	-	-	8.00 (2.4-10.1)	2.67 (0.45-3.25)	3.00	8.0	7.5	A++
	12	22	-	-	2.82	5.18	-	-	8.00 (2.4-10.1)	2.67 (0.45-3.25)	3.00	8.0	7.5	A++
	12	24	-	-	2.67	5.33	-	-	8.00 (2.4-10.1)	2.67 (0.45-3.25)	3.00	8.0	7.5	A++
	14	18	-	-	3.50	4.50	-	-	8.00 (2.4-10.1)	2.67 (0.45-3.25)	3.00	8.0	7.5	A++
	14	22	-	-	3.11	4.89	-	-	8.00 (2.4-10.1)	2.67 (0.45-3.25)	3.00	8.0	7.5	A++
	14	24	-	-	2.95	5.05	-	-	8.00 (2.4-10.1)	2.67 (0.45-3.25)	3.00	8.0	7.5	A++
	18	18	-	-	4.00	4.00	-	-	8.00 (2.4-10.1)	2.67 (0.45-3.25)	3.00	8.0	7.5	A++
	18	22	-	-	3.60	4.40	-	-	8.00 (2.4-10.1)	2.67 (0.45-3.25)	3.00	8.0	7.5	A++
	18	24	-	-	3.43	4.57	-	-	8.00 (2.4-10.1)	2.67 (0.45-3.25)	3.00	8.0	7.5	A++
	22	22	-	-	4.00	4.00	-	-	8.00 (2.4-10.1)	2.67 (0.45-3.25)	3.00	8.0	7.5	A++
	22	24	-	-	3.83	4.17	-	-	8.00 (2.4-10.1)	2.67 (0.45-3.25)	3.00	8.0	7.5	A++
	24	24	-	-	4.00	4.00	-	-	8.00 (2.4-10.1)	2.67 (0.45-3.25)	3.00	8.0	7.5	A++
3-unit connection	5	5	18	-	1.50	1.50	5.00	-	8.00 (2.40-9.60)	2.37 (0.45-3.30)	3.38	8.0	6.3	A++
	5	5	22	-	1.25	1.25	5.50	-	8.00 (2.40-10.10)	2.37 (0.45-3.30)	3.38	8.0	6.3	A++
	5	5	24	-	1.18	1.18	5.65	-	8.00 (2.40-10.10)	2.37 (0.45-3.30)	3.38	8.0	6.3	A++
	5	7	18	-	1.33	1.87	4.80	-	8.00 (2.40-10.10)	2.37 (0.45-3.30)	3.38	8.0	6.3	A++
	5	7	22	-	1.18	1.65	5.18	-	8.00 (2.40-10.10)	2.37 (0.45-3.30)	3.38	8.0	6.3	A++
	5	7	24	-	1.11	1.56	5.33	-	8.00 (2.40-10.10)	2.37 (0.45-3.30)	3.38	8.0	6.3	A++
	5	9	14	-	1.50	2.50	4.00	-	8.00 (2.40-10.10)	2.37 (0.45-3.30)	3.38	8.0	6.3	A++
	5	9	18	-	1.25	2.25	4.50	-	8.00 (2.40-10.00)	2.37 (0.45-3.30)	3.38	8.0	6.3	A++
	5	9	22	-	1.11	2.00	4.89	-	8.00 (2.40-10.10)	2.37 (0.45-3.30)	3.38	8.0	6.3	A++
	5	9	24	-	1.05	1.89	5.05	-	8.00 (2.40-10.10)	2.37 (0.45-3.30)	3.38	8.0	6.3	A++
	5	12	12	-	1.38	3.31	3.31	-	8.00 (2.40-10.10)	2.37 (0.45-3.30)	3.38	8.0	6.3	A++
	5	12	14	-	1.29	3.10	3.61	-	8.00 (2.40-10.10)	2.37 (0.45-3.30)	3.38	8.0	6.3	A++
	5	12	18	-	1.14	2.74	4.11	-	8.00 (2.40-10.10)	2.37 (0.45-3.30)	3.38	8.0	6.3	A++
	5	12	22	-	1.03	2.46	4.51	-	8.00 (2.40-10.10)	2.37 (0.45-3.30)	3.38	8.0	6.3	A++
	5	12	24	-	0.98	2.34	4.68	-	8.00 (2.40-10.10)	2.37 (0.45-3.30)	3.38	8.0	6.3	A++
	5	14	14	-	1.21	3.39	3.39	-	8.00 (2.40-10.10)	2.37 (0.45-3.30)	3.38	8.0	6.3	A++
	5	14	18	-	1.08	3.03	3.89	-	8.00 (2.40-10.10)	2.37 (0.45-3.30)	3.38	8.0	6.3	A++
	5	14	22	-	0.98	2.73	4.29	-	8.00 (2.40-10.10)	2.37 (0.45-3.30)	3.38	8.0	6.3	A++
	5	14	24	-	0.93	2.60	4.47	-	8.00 (2.40-10.10)	2.37 (0.45-3.30)	3.38	8.0	6.3	A++
	5	18	18	-	0.98	3.51	3.51	-	8.00 (2.40-10.10)	2.37 (0.45-3.30)	3.38	8.0	6.3	A++
	5	18	22	-	0.89	3.20	3.91	-	8.00 (2.40-10.10)	2.37 (0.45-3.30)	3.38	8.0	6.3	A++
	5	18	24	-	0.85	3.06	4.09	-	8.00 (2.40-10.10)	2.37 (0.45-3.30)	3.38	8.0	6.3	A++
	7	7	12	-	2.00	2.00	3.50	-	7.50 (2.4-9.3)	2.10 (0.45-2.84)	3.57	7.5	8.1	A++
	7	7	14	-	2.00	2.00	4.00	-	8.00 (2.4-10.1)	2.32 (0.45-3.25)	3.45	8.0	8.0	A++
	7	7	18	-	1.75	1.75	4.50	-	8.00 (2.4-10.1)	2.32 (0.45-3.25)	3.45	8.0	8.0	A++
	7	7	22	-	1.56	1.56	4.88	-	8.00 (2.4-10.1)	2.32 (0.45-3.25)	3.45	8.0	8.0	A++
	7	7	24	-	1.47	1.47	5.06	-	8.00 (2.4-10.1)	2.32 (0.45-3.25)	3.45	8.0	8.0	A++
	7	9	9	-	2.00	2.50	2.50	-	7.00 (2.4-8.9)	1.90 (0.45-2.65)	3.69	7.0	8.2	A++
	7	9	12	-	2.00	2.50	3.50	-	8.00 (2.4-10.1)	2.32 (0.45-3.25)	3.45	8.0	8.0	A++
	7	9	14	-	1.87	2.40	3.73	-	8.00 (2.4-10.1)	2.32 (0.45-3.25)	3.45	8.0	8.0	A++
	7	9	18	-	1.64	2.12	4.24	-	8.00 (2.4-10.1)	2.32 (0.45-3.25)	3.45	8.0	8.0	A++
	7	9	22	-	1.47	1.89	4.64	-	8.00 (2.4-10.1)	2.32 (0.45-3.25)	3.45	8.0	8.0	A++
	7	9	24	-	1.40	1.80	4.80	-	8.00 (2.4-10.1)	2.32 (0.45-3.25)	3.45	8.0	8.0	A++
	7	12	12	-	1.80	3.10	3.10	-	8.00 (2.4-10.1)	2.32 (0.45-3.25)	3.45	8.0	8.0	A++
	7	12	14	-	1.70	2.91	3.39	-	8.00 (2.4-10.1)	2.32 (0.45-3.25)	3.45	8.0	8.0	A++
	7	12	18	-	1.51	2.59	3.90	-	8.00 (2.4-10.1)	2.32 (0.45-3.25)	3.45	8.0	8.0	A++
	7	12	22	-	1.37	2.34	4.29	-	8.00 (2.4-10.1)	2.32 (0.45-3.25)	3.45	8.0	8.0	A++
	7	12	24	-	1.30	2.23	4.47	-	8.00 (2.4-10.1)	2.32 (0.45-3.25)	3.45	8.0	8.0	A++
	7	14	14	-	1.60	3.20	3.20	-	8.00 (2.4-10.1)	2.32 (0.45-3.25)	3.45	8.0	8.0	A++
	7	14	18	-	1.44	2.87	3.69	-	8.00 (2.4-10.1)	2.32 (0.45-3.25)	3.45	8.0	8.0	A++
	7	14	22	-	1.30	2.60	4.10	-	8.00 (2.4-10.1)	2.32 (0.45-3.25)	3.45	8.0	8.0	A++
	7	14	24	-	1.24	2.49	4.27	-	8.00 (2.4-10.1)	2.32 (0.45-3.25)	3.45	8.0	8.0	A++
	7	18	18	-	1.30	3.35	3.35	-	8.00 (2.4-10.1)	2.32 (0.45-3.25)	3.45	8.0	8.0	A++
	7	18	22	-	1.19	3.06	3.75	-	8.00 (2.4-10.1)	2.32 (0.45-3.25)	3.45	8.0	8.0	A++
	7	18	24	-	1.14	2.94	3.92	-	8.00 (2.4-10.1)	2.32 (0.45-3.25)	3.45	8.0	8.0	A++
	9	9	9	-	2.50	2.50	2.50	-	7.50 (2.4-9.6)	2.10 (0.45-3.01)	3.57	7.5	8.1	A++
	9	9	12	-	2.40	2.40	3.20	-	8.00 (2.4-10.1)	2.32 (0.45-3.25)	3.45	8.0	8.0	A++
	9	9	14	-	2.25	2.25	3.50	-	8.00 (2.4-10.1)	2.32 (0.45-3.25)	3.45	8.0	8.0	A++
	9	9	18	-	2.00	2.00	4.00	-	8.00 (2.4-10.1)	2.32 (0.45-3.25)	3.45	8.0	8.0	A++
	9	9	22	-	1.80	1.80	4.40	-	8.00 (2.4-10.1)	2.32 (0.45-3.25)	3.45	8.0	8.0	A++
	9	9	24	-	1.71	1.71	4.58	-	8.00 (2.4-10.1)	2.32 (0.45-3.25)	3.45	8.0	8.0	A++
	9	12	12	-	2.18	2.91	2.91	-	8.00 (2.4-10.1)	2.32 (0.45-3.25)	3.45	8.0	8.0	A++
	9	12	14	-	2.06	2.74	3.20	-	8.00 (2.4-10.1)	2.32 (0.45-3.25)	3.45	8.0	8.0	A++
	9	12	18	-	1.85	2.46	3.69	-	8.00 (2.4-10.1)	2.32 (0.45-3.25)	3.45	8.0	8.0	A++
	9	12	22	-	1.67	2.23	4.10	-	8.00 (2.4-10.1)	2.32 (0.45-3.25)	3.45	8.0	8.0	A++
	9	12	24	-	1.60	2.13	4.27	-	8.00 (2.4-10.1)	2.32 (0.45-3.25)	3.45	8.0	8.0	A++
	9	14	14	-	1.94	3.03	3.03	-	8.00 (2.4-10.1)	2.32 (0.45-3.25)	3.45	8.0	8.0	A++
	9	14	18	-	1.76	2.73	3.51	-	8.00 (2.4-10.1)	2.32 (0.45-3.25)	3.45	8.0	8.0	A++
	9	14	22	-	1.60	2.49	3.91	-	8.00 (2.4-10.1)	2.32 (0.45-3.25)	3.45	8.0	8.0	A++
	9	14	24	-	1.53	2.38	4.09	-	8.00 (2.4-10.1)	2.32 (0.45-3.25)	3.45	8.0	8.0	A++
	9	18	18	-	1.60	3.20	3.20	-	8.00(2.4-10.1)	2.32(0.45-3.25)	3.45	8.0	8.0	A++
	12	12	12	-	2.67	2.67	2.67	-	8.00 (2.4-10.1)	2.32 (0.45-3.25)	3.45	8.0	8.0	A++
	12	12	14	-	2.53	2.53	2.94	-	8.00 (2.4-10.1)	2.32 (0.45-3.25)	3.45	8.0	8.0	A++
	12	12	18	-	2.29	2.29	3.42	-	8.00 (2.4-10.1)	2.32 (0.45-3.25)	3.45	8.0	8.0	A++
	12	12	22	-	2.09	2.09	3.82	-	8.00 (2.4-10.1)	2.32 (0.45-3.25)	3.45	8.0	8.0	A++
	12	12	24	-	2.00	2.00	4.00	-	8.00 (2.4-10.1)	2.32 (0.45-3.25)	3.45	8.0	8.0	A++
	12	14	14	-	2.40	2.80	2.80	-	8.00 (2.4-10.1)	2.32 (0.45-3.25)	3.45	8.0	8.0	A++
	12	14	18	-	2.18	2.55	3.27	-	8.00 (2.4-10.1)	2.32 (0.45-3.25)	3.45	8.0	8.0	A++
	12	18	18	-	2.00	3.00	3.00	-	8.00 (2.4-10.1)	2.32 (0.45-3.25)	3.45	8.0	8.0	A++
	14	14	14	-	2.67	2.67	2.67	-	8.00 (2.4-10.1)	2.32 (0.45-3.25)	3.45	8.0	8.0	A++
	14	14	18	-	2.43	2.43	3.14	-	8.00 (2.4-10.1)	2.32 (0.45-3.25)	3.45	8.0	8.0	A++

4-unit Multi-split cooling

AOEG30KBTA4	Combination of Indoor Units				Cooling Operation									
					Cooling Capacity					Input Power (Min. - Max.)	EER	Seasonal Data		
					Unit 1	Unit 2	Unit 3	Unit 4	Total Capacity (Min. - Max.)			Pdesign	SEER	Energy efficiency
					kW	kW	kW	kW	kW	kW		kW		
4-unit connection	5	5	5	12	1.39	1.39	1.39	3.33	7.50 (2.40-9.30)	1.99 (0.45-3.00)	3.77	8.0	6.7	A++
	5	5	5	14	1.38	1.38	1.38	3.86	8.00 (2.40-10.10)	2.10 (0.45-3.30)	3.81	8.0	6.7	A++
	5	5	5	18	1.21	1.21	1.21	4.36	8.00 (2.40-10.10)	2.10 (0.45-3.30)	3.81	8.0	6.7	A++
	5	5	5	22	1.08	1.08	1.08	4.76	8.00 (2.40-10.10)	2.10 (0.45-3.30)	3.81	8.0	6.7	A++
	5	5	5	24	1.03	1.03	1.03	4.92	8.00 (2.40-10.10)	2.10 (0.45-3.30)	3.81	8.0	6.7	A++
	5	5	7	12	1.38	1.38	1.93	3.31	8.00 (2.40-10.10)	2.10 (0.45-3.30)	3.81	8.0	6.7	A++
	5	5	7	14	1.29	1.29	1.81	3.61	8.00 (2.40-10.10)	2.10 (0.45-3.30)	3.81	8.0	6.7	A++
	5	5	7	18	1.14	1.14	1.60	4.11	8.00 (2.40-10.10)	2.10 (0.45-3.30)	3.81	8.0	6.7	A++
	5	5	7	22	1.03	1.03	1.44	4.51	8.00 (2.40-10.10)	2.10 (0.45-3.30)	3.81	8.0	6.7	A++
	5	5	7	24	0.98	0.98	1.37	4.68	8.00 (2.40-10.10)	2.10 (0.45-3.30)	3.81	8.0	6.7	A++
	5	5	9	9	1.50	1.50	2.50	2.50	8.00 (2.40-10.10)	2.10 (0.45-3.30)	3.81	8.0	6.7	A++
	5	5	9	12	1.29	1.29	2.32	3.10	8.00 (2.40-10.10)	2.10 (0.45-3.30)	3.81	8.0	6.7	A++
	5	5	9	14	1.21	1.21	2.18	3.39	8.00 (2.40-10.10)	2.10 (0.45-3.30)	3.81	8.0	6.7	A++
	5	5	9	18	1.08	1.08	1.95	3.89	8.00 (2.40-10.10)	2.10 (0.45-3.30)	3.81	8.0	6.7	A++
	5	5	9	24	0.93	0.93	1.67	4.47	8.00 (2.40-10.10)	2.10 (0.45-3.30)	3.81	8.0	6.7	A++
	5	5	12	12	1.18	1.18	2.82	2.82	8.00 (2.40-10.10)	2.10 (0.45-3.30)	3.81	8.0	6.7	A++
	5	5	12	14	1.11	1.11	2.67	3.11	8.00 (2.40-10.10)	2.10 (0.45-3.30)	3.81	8.0	6.7	A++
	5	5	12	18	1.00	1.00	2.40	3.60	8.00 (2.40-10.10)	2.10 (0.45-3.30)	3.81	8.0	6.7	A++
	5	5	12	24	0.87	0.87	2.09	4.17	8.00 (2.40-10.10)	2.10 (0.45-3.30)	3.81	8.0	6.7	A++
	5	5	14	14	1.05	1.05	2.95	2.95	8.00 (2.40-10.10)	2.10 (0.45-3.30)	3.81	8.0	6.7	A++
	5	5	14	18	0.95	0.95	2.67	3.43	8.00 (2.40-10.10)	2.10 (0.45-3.30)	3.81	8.0	6.7	A++
	5	5	18	18	0.87	0.87	3.13	3.13	8.00 (2.40-10.10)	2.10 (0.45-3.30)	3.81	8.0	6.7	A++
	5	7	7	9	1.50	2.00	2.00	2.50	8.00 (2.40-10.10)	2.10 (0.45-3.30)	3.81	8.0	6.7	A++
	5	7	7	12	1.29	1.81	1.81	3.10	8.00 (2.40-10.10)	2.10 (0.45-3.30)	3.81	8.0	6.7	A++
	5	7	7	14	1.21	1.70	1.70	3.39	8.00 (2.40-10.10)	2.10 (0.45-3.30)	3.81	8.0	6.7	A++
	5	7	7	18	1.08	1.51	1.51	3.89	8.00 (2.40-10.10)	2.10 (0.45-3.30)	3.81	8.0	6.7	A++
	5	7	7	22	0.98	1.37	1.37	4.29	8.00 (2.40-10.10)	2.10 (0.45-3.30)	3.81	8.0	6.7	A++
	5	7	7	24	0.93	1.30	1.30	4.47	8.00 (2.40-10.10)	2.10 (0.45-3.30)	3.81	8.0	6.7	A++
	5	7	9	9	1.33	1.87	2.40	2.40	8.00 (2.40-10.10)	2.10 (0.45-3.30)	3.81	8.0	6.7	A++
	5	7	9	12	1.21	1.70	2.18	2.91	8.00 (2.40-10.10)	2.10 (0.45-3.30)	3.81	8.0	6.7	A++
	5	7	9	14	1.14	1.60	2.06	3.20	8.00 (2.40-10.10)	2.10 (0.45-3.30)	3.81	8.0	6.7	A++
	5	7	9	18	1.03	1.44	1.85	3.69	8.00 (2.40-10.10)	2.10 (0.45-3.30)	3.81	8.0	6.7	A++
	5	7	9	24	0.89	1.24	1.60	4.27	8.00 (2.40-10.10)	2.10 (0.45-3.30)	3.81	8.0	6.7	A++
	5	7	12	12	1.11	1.56	2.67	2.67	8.00 (2.40-10.10)	2.10 (0.45-3.30)	3.81	8.0	6.7	A++
	5	7	12	14	1.05	1.47	2.53	2.95	8.00 (2.40-10.10)	2.10 (0.45-3.30)	3.81	8.0	6.7	A++
	5	7	12	18	0.95	1.33	2.29	3.43	8.00 (2.40-10.10)	2.10 (0.45-3.30)	3.81	8.0	6.7	A++
	5	7	12	24	0.83	1.17	2.00	4.00	8.00 (2.40-10.10)	2.10 (0.45-3.30)	3.81	8.0	6.7	A++
	5	7	14	14	1.00	1.40	2.80	2.80	8.00 (2.40-10.10)	2.10 (0.45-3.30)	3.81	8.0	6.7	A++
	5	7	14	18	0.91	1.27	2.55	3.27	8.00 (2.40-10.10)	2.10 (0.45-3.30)	3.81	8.0	6.7	A++
	5	7	18	18	0.83	1.17	3.00	3.00	8.00 (2.40-10.10)	2.10 (0.45-3.30)	3.81	8.0	6.7	A++
	5	9	9	9	1.25	2.25	2.25	2.25	8.00 (2.40-10.10)	2.10 (0.45-3.30)	3.81	8.0	6.7	A++
	5	9	9	12	1.14	2.06	2.06	2.74	8.00 (2.40-10.10)	2.10 (0.45-3.30)	3.81	8.0	6.7	A++
	5	9	9	14	1.08	1.95	1.95	3.03	8.00 (2.40-10.10)	2.10 (0.45-3.30)	3.81	8.0	6.7	A++
	5	9	9	18	0.98	1.76	1.76	3.51	8.00 (2.40-10.10)	2.10 (0.45-3.30)	3.81	8.0	6.7	A++
	5	9	12	12	1.05	1.89	2.53	2.53	8.00 (2.40-10.10)	2.10 (0.45-3.30)	3.81	8.0	6.7	A++
	5	9	12	14	1.00	1.80	2.40	2.80	8.00 (2.40-10.10)	2.10 (0.45-3.30)	3.81	8.0	6.7	A++
	5	9	12	18	0.91	1.64	2.18	3.27	8.00 (2.40-10.10)	2.10 (0.45-3.30)	3.81	8.0	6.7	A++
	5	9	14	14	0.95	1.71	2.67	2.67	8.00 (2.40-10.10)	2.10 (0.45-3.30)	3.81	8.0	6.7	A++
	5	9	14	18	0.87	1.57	2.43	3.13	8.00 (2.40-10.10)	2.10 (0.45-3.30)	3.81	8.0	6.7	A++
	5	12	12	12	0.98	2.34	2.34	2.34	8.00 (2.40-10.10)	2.10 (0.45-3.30)	3.81	8.0	6.7	A++
	5	12	12	14	0.93	2.23	2.23	2.60	8.00 (2.40-10.10)	2.10 (0.45-3.30)	3.81	8.0	6.7	A++
	5	12	12	18	0.85	2.04	2.04	3.06	8.00 (2.40-10.10)	2.10 (0.45-3.30)	3.81	8.0	6.7	A++
	5	12	14	14	0.89	2.13	2.49	2.49	8.00 (2.40-10.10)	2.10 (0.45-3.30)	3.81	8.0	6.7	A++
	5	12	14	18	0.82	1.96	2.29	2.94	8.00 (2.40-10.10)	2.10 (0.45-3.30)	3.81	8.0	6.7	A++
	5	14	14	14	0.85	2.38	2.38	2.38	8.00 (2.40-10.10)	2.10 (0.45-3.30)	3.81	8.0	6.7	A++
	7	7	7	7	2.00	2.00	2.00	2.00	8.00 (2.4-10.1)	2.05 (0.45-3.25)	3.90	8.0	8.5	A+++
	7	7	7	9	1.87	1.87	1.87	2.39	8.00 (2.4-10.1)	2.05 (0.45-3.25)	3.90	8.0	8.5	A+++
	7	7	7	12	1.70	1.70	1.70	2.90	8.00 (2.4-10.1)	2.05 (0.45-3.25)	3.90	8.0	8.5	A+++
	7	7	7	14	1.60	1.60	1.60	3.20	8.00 (2.4-10.1)	2.05 (0.45-3.25)	3.90	8.0	8.5	A+++
	7	7	7	18	1.44	1.44	1.44	3.68	8.00 (2.4-10.1)	2.05 (0.45-3.25)	3.90	8.0	8.5	A+++
	7	7	9	9	1.75	1.75	2.25	2.25	8.00 (2.4-10.1)	2.05 (0.45-3.25)	3.90	8.0	8.5	A+++
	7	7	9	12	1.60	1.60	2.06	2.74	8.00 (2.4-10.1)	2.05 (0.45-3.25)	3.90	8.0	8.5	A+++
	7	7	9	14	1.51	1.51	1.95	3.03	8.00 (2.4-10.1)	2.05 (0.45-3.25)	3.90	8.0	8.5	A+++
	7	7	9	18	1.37	1.37	1.76	3.50	8.00 (2.4-10.1)	2.05 (0.45-3.25)	3.90	8.0	8.5	A+++
	7	7	12	12	1.47	1.47	2.53	2.53	8.00 (2.4-10.1)	2.05 (0.45-3.25)	3.90	8.0	8.5	A+++
	7	7	12	14	1.40	1.40	2.40	2.80	8.00 (2.4-10.1)	2.05 (0.45-3.25)	3.90	8.0	8.5	A+++
	7	7	12	18	1.27	1.27	2.18	3.28	8.00 (2.4-10.1)	2.05 (0.45-3.25)	3.90	8.0	8.5	A+++
	7	7	14	14	1.33	1.33	2.67	2.67	8.00 (2.4-10.1)	2.05 (0.45-3.25)	3.90	8.0	8.5	A+++
	7	7	14	18	1.22	1.22	2.43	3.13	8.00 (2.4-10.1)	2.05 (0.45-3.25)	3.90	8.0	8.5	A+++
	7	9	9	9	1.64	2.12	2.12	2.12	8.00 (2.4-10.1)	2.05 (0.45-3.25)	3.90	8.0	8.5	A+++
	7	9	9	12	1.51	1.95	1.95	2.59	8.00 (2.4-10.1)	2.05 (0.45-3.25)	3.90	8.0	8.5	A+++
	7	9	9	14	1.43	1.85	1.85	2.87	8.00 (2.4-10.1)	2.05 (0.45-3.25)	3.90	8.0	8.5	A+++
	7	9	9	18	1.30	1.67	1.67	3.36	8.00 (2.4-10.1)	2.05 (0.45-3.25)	3.90	8.0	8.5	A+++
	7	9	12	12	1.40	1.80	2.40	2.40	8.00 (2.4-10.1)	2.05 (0.45-3.25)	3.90	8.0	8.5	A+++
	7	9	12	14	1.33	1.71	2.29	2.67	8.00 (2.4-10.1)	2.05 (0.45-3.25)	3.90	8.0	8.5	A+++
	7	9	12	18	1.21	1.57	2.09	3.13	8.00 (2.4-10.1)	2.05 (0.45-3.25)	3.90	8.0	8.5	A+++
	7	9	14	14	1.26	1.64	2.55	2.55	8.00 (2.4-10.1)	2.05 (0.45-3.25)	3.90	8.0	8.5	A+++
	7	9	14	18	1.17	1.50	2.33	3.00	8.00 (2.4-10.1)	2.05 (0.45-3.25)	3.90	8.0	8.5	A+++
	7	12	12	12	1.31	2.23	2.23	2.23	8.00 (2.4-10.1)	2.05 (0.45-3.25)	3.90	8.0

4-unit Multi-split Combination Table–Heating

The data in the table below shows the performance of various combinations of indoor and outdoor units of different capacities, using the most efficient type of indoor unit.
These values should not be interpreted as official declarations for tax incentives or other certifications.
For more information on specific types of indoor and outdoor unit combinations, please refer to the Design & Technical Manual.

4-unit Multi-split heating

AOEG30KBTA4	Combination of Indoor Units				Heating Operation									
					Heating Capacity					Input Power (Min. - Max.)	COP	Seasonal Data		
					Unit 1	Unit 2	Unit 3	Unit 4	Total Capacity (Min. - Max.)			Pdesign	SCOP	Energy efficiency
					kW	kW	kW	kW	kW	kW		kW		
2-unit connection	5	22	-	-	1.67	7.33	-	-	9.00 (3.00-10.60)	2.46 (0.30-2.83)	3.66	6.0	4.0	A+
	5	24	-	-	1.66	7.94	-	-	9.60 (3.00-10.70)	2.55 (0.30-3.03)	3.76	6.5	3.9	A
	7	22	-	-	2.40	7.20	-	-	9.60 (3.0-11.2)	2.47 (0.30-2.95)	3.89	6.5	4.1	A+
	7	24	-	-	2.17	7.43	-	-	9.60 (3.0-11.2)	2.47 (0.30-2.95)	3.89	6.5	4.1	A+
	9	22	-	-	2.79	6.81	-	-	9.60 (3.0-11.2)	2.47 (0.30-2.95)	3.89	6.5	4.1	A+
	9	24	-	-	2.62	6.98	-	-	9.60 (3.0-11.2)	2.47 (0.30-2.95)	3.89	6.5	4.1	A+
	12	18	-	-	3.84	5.76	-	-	9.60 (3.0-11.2)	2.47 (0.30-2.95)	3.89	6.5	4.1	A+
	12	22	-	-	3.39	6.21	-	-	9.60 (3.0-11.2)	2.47 (0.30-2.95)	3.89	6.5	4.1	A+
	12	24	-	-	3.20	6.40	-	-	9.60 (3.0-11.2)	2.47 (0.30-2.95)	3.89	6.5	4.1	A+
	14	18	-	-	4.20	5.40	-	-	9.60 (3.0-11.2)	2.47 (0.30-2.95)	3.89	6.5	4.1	A+
	14	22	-	-	3.73	5.87	-	-	9.60 (3.0-11.2)	2.47 (0.30-2.95)	3.89	6.5	4.1	A+
	14	24	-	-	3.54	6.06	-	-	9.60 (3.0-11.2)	2.47 (0.30-2.95)	3.89	6.5	4.1	A+
	18	18	-	-	4.80	4.80	-	-	9.60 (3.0-11.2)	2.47 (0.30-2.95)	3.89	6.5	4.1	A+
	18	22	-	-	4.32	5.28	-	-	9.60 (3.0-11.2)	2.47 (0.30-2.95)	3.89	6.5	4.1	A+
	18	24	-	-	4.11	5.49	-	-	9.60 (3.0-11.2)	2.47 (0.30-2.95)	3.89	6.5	4.1	A+
	22	22	-	-	4.80	4.80	-	-	9.60 (3.0-11.2)	2.47 (0.30-2.95)	3.89	6.5	4.1	A+
	22	24	-	-	4.59	5.01	-	-	9.60 (3.0-11.2)	2.47 (0.30-2.95)	3.89	6.5	4.1	A+
	24	24	-	-	4.80	4.80	-	-	9.60 (3.0-11.2)	2.47 (0.30-2.95)	3.89	6.5	4.1	A+
3-unit connection	5	5	18	-	1.71	1.71	6.17	-	9.60 (3.00-10.70)	2.36 (0.30-3.03)	4.07	6.5	4.0	A+
	5	5	22	-	1.50	1.50	6.60	-	9.60 (3.00-11.20)	2.36 (0.30-3.03)	4.07	6.5	4.0	A+
	5	5	24	-	1.41	1.41	6.78	-	9.60 (3.00-11.20)	2.36 (0.30-3.03)	4.07	6.5	4.0	A+
	5	7	18	-	1.60	2.24	5.76	-	9.60 (3.00-11.20)	2.36 (0.30-3.03)	4.07	6.5	4.0	A+
	5	7	22	-	1.41	1.98	6.21	-	9.60 (3.00-11.20)	2.36 (0.30-3.03)	4.07	6.5	4.0	A+
	5	7	24	-	1.33	1.87	6.40	-	9.60 (3.00-11.20)	2.36 (0.30-3.03)	4.07	6.5	4.0	A+
	5	9	14	-	1.71	3.09	4.80	-	9.60 (3.00-11.20)	2.36 (0.30-3.03)	4.07	6.5	4.0	A+
	5	9	18	-	1.50	2.70	5.40	-	9.60 (3.00-11.20)	2.36 (0.30-3.03)	4.07	6.5	4.0	A+
	5	9	22	-	1.33	2.40	5.87	-	9.60 (3.00-11.20)	2.36 (0.30-3.03)	4.07	6.5	4.0	A+
	5	9	24	-	1.26	2.27	6.06	-	9.60 (3.00-11.20)	2.36 (0.30-3.03)	4.07	6.5	4.0	A+
	5	12	12	-	1.66	3.97	3.97	-	9.60 (3.00-11.20)	2.36 (0.30-3.03)	4.07	6.5	4.0	A+
	5	12	14	-	1.55	3.72	4.34	-	9.60 (3.00-11.20)	2.36 (0.30-3.03)	4.07	6.5	4.0	A+
	5	12	18	-	1.37	3.29	4.94	-	9.60 (3.00-11.20)	2.36 (0.30-3.03)	4.07	6.5	4.0	A+
	5	12	22	-	1.23	2.95	5.42	-	9.60 (3.00-11.20)	2.36 (0.30-3.03)	4.07	6.5	4.0	A+
	5	12	24	-	1.17	2.81	5.62	-	9.60 (3.00-11.20)	2.36 (0.30-3.03)	4.07	6.5	4.0	A+
	5	14	14	-	1.45	4.07	4.07	-	9.60 (3.00-11.20)	2.36 (0.30-3.03)	4.07	6.5	4.0	A+
	5	14	18	-	1.30	3.63	4.67	-	9.60 (3.00-11.20)	2.36 (0.30-3.03)	4.07	6.5	4.0	A+
	5	14	22	-	1.17	3.28	5.15	-	9.60 (3.00-11.20)	2.36 (0.30-3.03)	4.07	6.5	4.0	A+
	5	14	24	-	1.12	3.13	5.36	-	9.60 (3.00-11.20)	2.36 (0.30-3.03)	4.07	6.5	4.0	A+
	5	18	18	-	1.17	4.21	4.21	-	9.60 (3.00-11.20)	2.36 (0.30-3.03)	4.07	6.5	4.0	A+
	5	18	22	-	1.07	3.84	4.69	-	9.60 (3.00-11.20)	2.36 (0.30-3.03)	4.07	6.5	4.0	A+
	5	18	24	-	1.02	3.68	4.90	-	9.60 (3.00-11.20)	2.36 (0.30-3.03)	4.07	6.5	4.0	A+
	7	7	12	-	2.40	2.40	4.20	-	9.00 (3.0-10.4)	2.11 (0.30-2.60)	4.27	6.0	4.4	A+
	7	7	14	-	2.40	2.40	4.80	-	9.60 (3.0-11.2)	2.27 (0.30-2.95)	4.22	6.5	4.3	A+
	7	7	18	-	2.10	2.10	5.40	-	9.60 (3.0-11.2)	2.27 (0.30-2.95)	4.22	6.5	4.3	A+
	7	7	22	-	1.87	1.87	5.86	-	9.60 (3.0-11.2)	2.27 (0.30-2.95)	4.22	6.5	4.3	A+
	7	7	24	-	1.77	1.77	6.06	-	9.60 (3.0-11.2)	2.27 (0.30-2.95)	4.22	6.5	4.3	A+
	7	9	9	-	2.40	3.00	3.00	-	8.40 (3.0-10.0)	1.94 (0.30-2.45)	4.32	6.0	4.4	A+
	7	9	12	-	2.40	3.00	4.20	-	9.60 (3.0-11.2)	2.27 (0.30-2.95)	4.22	6.5	4.3	A+
	7	9	14	-	2.24	2.88	4.48	-	9.60 (3.0-11.2)	2.27 (0.30-2.95)	4.22	6.5	4.3	A+
	7	9	18	-	1.98	2.54	5.08	-	9.60 (3.0-11.2)	2.27 (0.30-2.95)	4.22	6.5	4.3	A+
	7	9	22	-	1.77	2.27	5.56	-	9.60 (3.0-11.2)	2.27 (0.30-2.95)	4.22	6.5	4.3	A+
	7	9	24	-	1.68	2.16	5.76	-	9.60 (3.0-11.2)	2.27 (0.30-2.95)	4.22	6.5	4.3	A+
	7	12	12	-	2.16	3.72	3.72	-	9.60 (3.0-11.2)	2.27 (0.30-2.95)	4.22	6.5	4.3	A+
	7	12	14	-	2.04	3.49	4.07	-	9.60 (3.0-11.2)	2.27 (0.30-2.95)	4.22	6.5	4.3	A+
	7	12	18	-	1.82	3.11	4.67	-	9.60 (3.0-11.2)	2.27 (0.30-2.95)	4.22	6.5	4.3	A+
	7	12	22	-	1.64	2.81	5.15	-	9.60 (3.0-11.2)	2.27 (0.30-2.95)	4.22	6.5	4.3	A+
	7	12	24	-	1.56	2.68	5.36	-	9.60 (3.0-11.2)	2.27 (0.30-2.95)	4.22	6.5	4.3	A+
	7	14	14	-	1.92	3.84	3.84	-	9.60 (3.0-11.2)	2.27 (0.30-2.95)	4.22	6.5	4.3	A+
	7	14	18	-	1.72	3.45	4.43	-	9.60 (3.0-11.2)	2.27 (0.30-2.95)	4.22	6.5	4.3	A+
	7	14	22	-	1.56	3.13	4.91	-	9.60 (3.0-11.2)	2.27 (0.30-2.95)	4.22	6.5	4.3	A+
	7	14	24	-	1.49	2.99	5.12	-	9.60 (3.0-11.2)	2.27 (0.30-2.95)	4.22	6.5	4.3	A+
	7	18	18	-	1.56	4.02	4.02	-	9.60 (3.0-11.2)	2.27 (0.30-2.95)	4.22	6.5	4.3	A+
	7	18	22	-	1.43	3.68	4.49	-	9.60 (3.0-11.2)	2.27 (0.30-2.95)	4.22	6.5	4.3	A+
	7	18	24	-	1.37	3.53	4.70	-	9.60 (3.0-11.2)	2.27 (0.30-2.95)	4.22	6.5	4.3	A+
	9	9	9	-	3.00	3.00	3.00	-	9.00 (3.0-10.8)	2.11 (0.30-2.76)	4.27	6.0	4.4	A+
	9	9	12	-	2.88	2.88	3.84	-	9.60 (3.0-11.2)	2.27 (0.30-2.95)	4.22	6.5	4.3	A+
	9	9	14	-	2.70	2.70	4.20	-	9.60 (3.0-11.2)	2.27 (0.30-2.95)	4.22	6.5	4.3	A+
	9	9	18	-	2.40	2.40	4.80	-	9.60 (3.0-11.2)	2.27 (0.30-2.95)	4.22	6.5	4.3	A+
	9	9	22	-	2.16	2.16	5.28	-	9.60 (3.0-11.2)	2.27 (0.30-2.95)	4.22	6.5	4.3	A+
	9	9	24	-	2.06	2.06	5.48	-	9.60 (3.0-11.2)	2.27 (0.30-2.95)	4.22	6.5	4.3	A+
	9	12	12	-	2.62	3.49	3.49	-	9.60 (3.0-11.2)	2.27 (0.30-2.95)	4.22	6.5	4.3	A+
	9	12	14	-	2.47	3.29	3.84	-	9.60 (3.0-11.2)	2.27 (0.30-2.95)	4.22	6.5	4.3	A+
	9	12	18	-	2.22	2.95	4.43	-	9.60 (3.0-11.2)	2.27 (0.30-2.95)	4.22	6.5	4.3	A+
	9	12	22	-	2.01	2.68	4.91	-	9.60 (3.0-11.2)	2.27 (0.30-2.95)	4.22	6.5	4.3	A+
	9	12	24	-	1.92	2.56	5.12	-	9.60 (3.0-11.2)	2.27 (0.30-2.95)	4.22	6.5	4.3	A+
	9	14	14	-	2.34	3.63	3.63	-	9.60 (3.0-11.2)	2.27 (0.30-2.95)	4.22	6.5	4.3	A+
	9	14	18	-	2.11	3.28	4.21	-	9.60 (3.0-11.2)	2.27 (0.30-2.95)	4.22	6.5	4.3	A+
	9	14	22	-	1.92	2.99	4.69	-	9.60 (3.0-11.2)	2.27 (0.30-2.95)	4.22	6.5	4.3	A+
	9	14	24	-	1.84	2.86	4.90	-	9.60 (3.0-11.2)	2.27 (0.30-2.95)	4.22	6.5	4.3	A+
	9	18	18	-	1.92	3.84	3.84	-	9.60(3.0-11.2)	2.27(0.30-2.95)	4.22	6.5	4.3	A+
	12	12	12	-	3.20	3.20	3.20	-	9.60 (3.0-11.2)	2.27 (0.30-2.95)	4.22	6.5	4.3	A+
	12	12	14	-	3.03	3.03	3.54	-	9.60 (3.0-11.2)	2.27 (0.30-2.95)	4.22	6.5	4.3	A+
	12	12	18	-	2.74	2.74	4.12	-	9.60 (3.0-11.2)	2.27 (0.30-2.95)	4.22	6.5	4.3	A+
	12	12	22	-	2.50	2.50	4.60	-	9.60 (3.0-11.2)	2.27 (0.30-2.95)	4.22	6.5	4.3	A+
	12	12	24	-	2.40	2.40	4.80	-	9.60 (3.0-11.2)	2.27 (0.30-2.95)	4.22	6.5	4.3	A+
	12	14	14	-	2.88	3.36	3.36	-	9.60 (3.0-11.2)	2.27 (0.30-2.95)	4.22	6.5	4.3	A+
	12	14	18	-	2.62	3.05	3.93	-	9.60 (3.0-11.2)	2.27 (0.30-2.95)	4.22	6.5	4.3	A+
	12	18	18	-	2.40	3.60	3.60	-	9.60 (3.0-11.2)	2.27 (0.30-2.95)	4.22	6.5	4.3	A+
	14	14	14	-	3.20	3.20	3.20	-	9.60 (3.0-11.2)	2.27 (0.30-2.95)	4.22	6.5	4.3	A+
	14	14	18	-	2.92	2.92	3.76	-	9.60 (3.0-11.2)	2.27 (0.30-2.95)	4.22	6.5	4.3	A+

4-unit Multi-split heating

AOEG30KBTA4	Combination of Indoor Units				Heating Operation									
					Heating Capacity					Input Power (Min. - Max.)	COP	Seasonal Data		
					Unit 1	Unit 2	Unit 3	Unit 4	Total Capacity (Min. - Max.)			Pdesign	SCOP	Energy efficiency
					kW	kW	kW	kW	kW	kW		kW		
4-unit connection	5	5	5	12	1.67	1.67	1.67	4.00	9.00 (3.00-10.80)	2.10 (0.30-2.83)	4.29	6.5	4.3	A+
	5	5	5	14	1.66	1.66	1.66	4.63	9.60 (3.00-11.20)	2.19 (0.30-3.03)	4.38	6.5	4.3	A+
	5	5	5	18	1.45	1.45	1.45	5.24	9.60 (3.00-11.20)	2.19 (0.30-3.03)	4.38	6.5	4.3	A+
	5	5	5	22	1.30	1.30	1.30	5.71	9.60 (3.00-11.20)	2.19 (0.30-3.03)	4.38	6.5	4.3	A+
	5	5	5	24	1.23	1.23	1.23	5.91	9.60 (3.00-11.20)	2.19 (0.30-3.03)	4.38	6.5	4.3	A+
	5	5	7	12	1.66	1.66	2.32	3.97	9.60 (3.00-11.20)	2.19 (0.30-3.03)	4.38	6.5	4.3	A+
	5	5	7	14	1.55	1.55	2.17	4.34	9.60 (3.00-11.20)	2.19 (0.30-3.03)	4.38	6.5	4.3	A+
	5	5	7	18	1.37	1.37	1.92	4.94	9.60 (3.00-11.20)	2.19 (0.30-3.03)	4.38	6.5	4.3	A+
	5	5	7	22	1.23	1.23	1.72	5.42	9.60 (3.00-11.20)	2.19 (0.30-3.03)	4.38	6.5	4.3	A+
	5	5	7	24	1.17	1.17	1.64	5.62	9.60 (3.00-11.20)	2.19 (0.30-3.03)	4.38	6.5	4.3	A+
	5	5	9	9	1.71	1.71	3.09	3.09	9.60 (3.00-11.20)	2.19 (0.30-3.03)	4.38	6.5	4.3	A+
	5	5	9	12	1.55	1.55	2.79	3.72	9.60 (3.00-11.20)	2.19 (0.30-3.03)	4.38	6.5	4.3	A+
	5	5	9	14	1.45	1.45	2.62	4.07	9.60 (3.00-11.20)	2.19 (0.30-3.03)	4.38	6.5	4.3	A+
	5	5	9	18	1.30	1.30	2.34	4.67	9.60 (3.00-11.20)	2.19 (0.30-3.03)	4.38	6.5	4.3	A+
	5	5	9	24	1.12	1.12	2.01	5.36	9.60 (3.00-11.20)	2.19 (0.30-3.03)	4.38	6.5	4.3	A+
	5	5	12	12	1.41	1.41	3.39	3.39	9.60 (3.00-11.20)	2.19 (0.30-3.03)	4.38	6.5	4.3	A+
	5	5	12	14	1.33	1.33	3.20	3.73	9.60 (3.00-11.20)	2.19 (0.30-3.03)	4.38	6.5	4.3	A+
	5	5	12	18	1.20	1.20	2.88	4.32	9.60 (3.00-11.20)	2.19 (0.30-3.03)	4.38	6.5	4.3	A+
	5	5	12	24	1.04	1.04	2.50	5.01	9.60 (3.00-11.20)	2.19 (0.30-3.03)	4.38	6.5	4.3	A+
	5	5	14	14	1.26	1.26	3.54	3.54	9.60 (3.00-11.20)	2.19 (0.30-3.03)	4.38	6.5	4.3	A+
	5	5	14	18	1.14	1.14	3.20	4.11	9.60 (3.00-11.20)	2.19 (0.30-3.03)	4.38	6.5	4.3	A+
	5	5	18	18	1.04	1.04	3.76	3.76	9.60 (3.00-11.20)	2.19 (0.30-3.03)	4.38	6.5	4.3	A+
	5	7	7	9	1.71	2.40	2.40	3.09	9.60 (3.00-11.20)	2.19 (0.30-3.03)	4.38	6.5	4.3	A+
	5	7	7	12	1.55	2.17	2.17	3.72	9.60 (3.00-11.20)	2.19 (0.30-3.03)	4.38	6.5	4.3	A+
	5	7	7	14	1.45	2.04	2.04	4.07	9.60 (3.00-11.20)	2.19 (0.30-3.03)	4.38	6.5	4.3	A+
	5	7	7	18	1.30	1.82	1.82	4.67	9.60 (3.00-11.20)	2.19 (0.30-3.03)	4.38	6.5	4.3	A+
	5	7	7	22	1.17	1.64	1.64	5.15	9.60 (3.00-11.20)	2.19 (0.30-3.03)	4.38	6.5	4.3	A+
	5	7	7	24	1.12	1.56	1.56	5.36	9.60 (3.00-11.20)	2.19 (0.30-3.03)	4.38	6.5	4.3	A+
	5	7	9	9	1.60	2.24	2.88	2.88	9.60 (3.00-11.20)	2.19 (0.30-3.03)	4.38	6.5	4.3	A+
	5	7	9	12	1.45	2.04	2.62	3.49	9.60 (3.00-11.20)	2.19 (0.30-3.03)	4.38	6.5	4.3	A+
	5	7	9	14	1.37	1.92	2.47	3.84	9.60 (3.00-11.20)	2.19 (0.30-3.03)	4.38	6.5	4.3	A+
	5	7	9	18	1.23	1.72	2.22	4.43	9.60 (3.00-11.20)	2.19 (0.30-3.03)	4.38	6.5	4.3	A+
	5	7	9	24	1.07	1.49	1.92	5.12	9.60 (3.00-11.20)	2.19 (0.30-3.03)	4.38	6.5	4.3	A+
	5	7	12	12	1.33	1.87	3.20	3.20	9.60 (3.00-11.20)	2.19 (0.30-3.03)	4.38	6.5	4.3	A+
	5	7	12	14	1.26	1.77	3.03	3.54	9.60 (3.00-11.20)	2.19 (0.30-3.03)	4.38	6.5	4.3	A+
	5	7	12	18	1.14	1.60	2.74	4.11	9.60 (3.00-11.20)	2.19 (0.30-3.03)	4.38	6.5	4.3	A+
	5	7	12	24	1.00	1.40	2.40	4.80	9.60 (3.00-11.20)	2.19 (0.30-3.03)	4.38	6.5	4.3	A+
	5	7	14	14	1.20	1.68	3.36	3.36	9.60 (3.00-11.20)	2.19 (0.30-3.03)	4.38	6.5	4.3	A+
	5	7	14	18	1.09	1.53	3.05	3.93	9.60 (3.00-11.20)	2.19 (0.30-3.03)	4.38	6.5	4.3	A+
	5	7	18	18	1.00	1.40	3.60	3.60	9.60 (3.00-11.20)	2.19 (0.30-3.03)	4.38	6.5	4.3	A+
	5	9	9	9	1.50	2.70	2.70	2.70	9.60 (3.00-11.20)	2.19 (0.30-3.03)	4.38	6.5	4.3	A+
	5	9	9	12	1.37	2.47	2.47	3.29	9.60 (3.00-11.20)	2.19 (0.30-3.03)	4.38	6.5	4.3	A+
	5	9	9	14	1.30	2.34	2.34	3.63	9.60 (3.00-11.20)	2.19 (0.30-3.03)	4.38	6.5	4.3	A+
	5	9	9	18	1.17	2.11	2.11	4.21	9.60 (3.00-11.20)	2.19 (0.30-3.03)	4.38	6.5	4.3	A+
	5	9	12	12	1.26	2.27	3.03	3.03	9.60 (3.00-11.20)	2.19 (0.30-3.03)	4.38	6.5	4.3	A+
	5	9	12	14	1.20	2.16	2.88	3.36	9.60 (3.00-11.20)	2.19 (0.30-3.03)	4.38	6.5	4.3	A+
	5	9	12	18	1.09	1.96	2.62	3.93	9.60 (3.00-11.20)	2.19 (0.30-3.03)	4.38	6.5	4.3	A+
	5	9	14	14	1.14	2.06	3.20	3.20	9.60 (3.00-11.20)	2.19 (0.30-3.03)	4.38	6.5	4.3	A+
	5	9	14	18	1.04	1.88	2.92	3.76	9.60 (3.00-11.20)	2.19 (0.30-3.03)	4.38	6.5	4.3	A+
	5	12	12	12	1.17	2.81	2.81	2.81	9.60 (3.00-11.20)	2.19 (0.30-3.03)	4.38	6.5	4.3	A+
	5	12	12	14	1.12	2.68	2.68	3.13	9.60 (3.00-11.20)	2.19 (0.30-3.03)	4.38	6.5	4.3	A+
	5	12	12	18	1.02	2.45	2.45	3.68	9.60 (3.00-11.20)	2.19 (0.30-3.03)	4.38	6.5	4.3	A+
	5	12	14	14	1.07	2.56	2.99	2.99	9.60 (3.00-11.20)	2.19 (0.30-3.03)	4.38	6.5	4.3	A+
	5	12	14	18	0.98	2.35	2.74	3.53	9.60 (3.00-11.20)	2.19 (0.30-3.03)	4.38	6.5	4.3	A+
	5	14	14	14	1.02	2.86	2.86	2.86	9.60 (3.00-11.20)	2.19 (0.30-3.03)	4.38	6.5	4.3	A+
	7	7	7	7	2.40	2.40	2.40	2.40	9.60 (3.0-11.2)	2.11 (0.30-2.95)	4.55	6.5	4.6	A++
	7	7	7	9	2.24	2.24	2.24	2.88	9.60 (3.0-11.2)	2.11 (0.30-2.95)	4.55	6.5	4.6	A++
	7	7	7	12	2.04	2.04	2.04	3.48	9.60 (3.0-11.2)	2.11 (0.30-2.95)	4.55	6.5	4.6	A++
	7	7	7	14	1.92	1.92	1.92	3.84	9.60 (3.0-11.2)	2.11 (0.30-2.95)	4.55	6.5	4.6	A++
	7	7	7	18	1.72	1.72	1.72	4.44	9.60(3.0-11.2)	2.11 (0.30-2.95)	4.55	6.5	4.6	A++
	7	7	9	9	2.10	2.10	2.70	2.70	9.60 (3.0-11.2)	2.11 (0.30-2.95)	4.55	6.5	4.6	A++
	7	7	9	12	1.92	1.92	2.47	3.29	9.60 (3.0-11.2)	2.11 (0.30-2.95)	4.55	6.5	4.6	A++
	7	7	9	14	1.82	1.82	2.34	3.62	9.60 (3.0-11.2)	2.11 (0.30-2.95)	4.55	6.5	4.6	A++
	7	7	9	18	1.64	1.64	2.11	4.21	9.60 (3.0-11.2)	2.11 (0.30-2.95)	4.55	6.5	4.6	A++
	7	7	12	12	1.77	1.77	3.03	3.03	9.60 (3.0-11.2)	2.11 (0.30-2.95)	4.55	6.5	4.6	A++
	7	7	12	14	1.68	1.68	2.88	3.36	9.60 (3.0-11.2)	2.11 (0.30-2.95)	4.55	6.5	4.6	A++
	7	7	12	18	1.53	1.53	2.62	3.92	9.60 (3.0-11.2)	2.11 (0.30-2.95)	4.55	6.5	4.6	A++
	7	7	14	14	1.60	1.60	3.20	3.20	9.60 (3.0-11.2)	2.11 (0.30-2.95)	4.55	6.5	4.6	A++
	7	7	14	18	1.46	1.46	2.92	3.76	9.60 (3.0-11.2)	2.11 (0.30-2.95)	4.55	6.5	4.6	A++
	7	9	9	9	1.98	2.54	2.54	2.54	9.60 (3.0-11.2)	2.11 (0.30-2.95)	4.55	6.5	4.6	A++
	7	9	9	12	1.81	2.34	2.34	3.11	9.60 (3.0-11.2)	2.11 (0.30-2.95)	4.55	6.5	4.6	A++
	7	9	9	14	1.71	2.22	2.22	3.45	9.60 (3.0-11.2)	2.11 (0.30-2.95)	4.55	6.5	4.6	A++
	7	9	9	18	1.56	2.01	2.01	4.02	9.60 (3.0-11.2)	2.11 (0.30-2.95)	4.55	6.5	4.6	A++
	7	9	12	12	1.68	2.16	2.88	2.88	9.60 (3.0-11.2)	2.11 (0.30-2.95)	4.55	6.5	4.6	A++
	7	9	12	14	1.60	2.06	2.74	3.20	9.60 (3.0-11.2)	2.11 (0.30-2.95)	4.55	6.5	4.6	A++
	7	9	12	18	1.46	1.88	2.50	3.76	9.60 (3.0-11.2)	2.11 (0.30-2.95)	4.55	6.5	4.6	A++
	7	9	14	14	1.54	1.96	3.05	3.05	9.60 (3.0-11.2)	2.11 (0.30-2.95)	4.55	6.5	4.6	A++
	7	9	14	18	1.40	1.80	2.80	3.60	9.60 (3.0-11.2)	2.11 (0.30-2.95)	4.55	6.5	4.6	A++
	7	12	12	12	1.56	2.68	2.68	2.68	9.60 (3.0-11.2)	2.11 (0.30-2.95)	4.55	6.5	4.6	A++
	7	12	12	14	1

5-unit Multi-split Combination Table–Cooling

The data in the table below shows the performance of various combinations of indoor and outdoor units of different capacities, using the most efficient type of indoor unit.
These values should not be interpreted as official declarations for tax incentives or other certifications.
For more information on specific types of indoor and outdoor unit combinations, please refer to the Design & Technical Manual.

REFRIGERANT R32

5-unit Multi-split cooling

AOEG36KBTA5	Combination of Indoor Units					Cooling Operation										
						Cooling Capacity						Input Power (Min. - Max.)	EER	Seasonal Data		
						Unit 1	Unit 2	Unit 3	Unit 4	Unit 5	Total Capacity (Min. - Max.)			Pdesign	SEER	Energy efficiency
						kW	kW	kW	kW	kW	kW	kW		kW		
2-unit connection	5	22	-	-	-	1.50	6.00	-	-	-	7.50 (3.00-9.60)	1.70 (0.30-2.84)	4.42	7.5	6.1	A++
	5	24	-	-	-	1.50	7.00	-	-	-	8.50 (3.00-10.30)	2.19 (0.30-3.13)	3.88	8.5	6.0	A+
	7	24	-	-	-	2.00	7.00	-	-	-	9.00 (3.0-11.0)	2.91 (0.30-3.45)	3.09	9.0	7.9	A++
	9	22	-	-	-	2.50	6.00	-	-	-	8.50 (3.0-11.0)	2.67 (0.30-3.45)	3.18	8.5	7.9	A+++
	9	24	-	-	-	2.50	7.00	-	-	-	9.50 (3.0-11.0)	3.17 (0.30-3.45)	3.00	9.5	7.8	A++
	12	22	-	-	-	3.50	6.00	-	-	-	9.50 (3.0-11.0)	3.17 (0.30-3.45)	3.00	9.5	7.8	A++
	12	24	-	-	-	3.17	6.33	-	-	-	9.50 (3.0-11.0)	3.17 (0.30-3.45)	3.00	9.5	7.8	A++
	14	22	-	-	-	3.69	5.81	-	-	-	9.50 (3.0-11.0)	3.17 (0.30-3.45)	3.00	9.5	7.8	A++
	14	24	-	-	-	3.50	6.00	-	-	-	9.50 (3.0-11.0)	3.17 (0.30-3.45)	3.00	9.5	7.8	A++
	18	18	-	-	-	4.75	4.75	-	-	-	9.50 (3.0-11.0)	3.17 (0.30-3.45)	3.00	9.5	7.8	A++
	18	22	-	-	-	4.27	5.23	-	-	-	9.50 (3.0-11.0)	3.17 (0.30-3.45)	3.00	9.5	7.8	A++
	18	24	-	-	-	4.07	5.43	-	-	-	9.50 (3.0-11.0)	3.17 (0.30-3.45)	3.00	9.5	7.8	A++
	22	22	-	-	-	4.75	4.75	-	-	-	9.50 (3.0-11.0)	3.17 (0.30-3.45)	3.00	9.5	7.8	A++
	22	24	-	-	-	4.54	4.96	-	-	-	9.50 (3.0-11.0)	3.17 (0.30-3.45)	3.00	9.5	7.8	A++
	24	24	-	-	-	4.75	4.75	-	-	-	9.50 (3.0-11.0)	3.17 (0.30-3.45)	3.00	9.5	7.8	A++
3-unit connection	5	5	18	-	-	1.43	1.43	5.14	-	-	8.00 (3.00-9.70)	2.36 (0.30-2.98)	3.38	8.0	6.3	A++
	5	5	22	-	-	1.41	1.41	6.19	-	-	9.00 (3.00-11.00)	2.69 (0.30-3.46)	3.35	9.0	6.2	A++
	5	5	24	-	-	1.40	1.40	6.71	-	-	9.50 (3.00-11.00)	2.92 (0.30-3.46)	3.26	9.5	6.1	A++
	5	7	18	-	-	1.42	1.98	5.10	-	-	8.50 (3.00-10.40)	2.61 (0.30-3.28)	3.26	8.5	6.2	A++
	5	7	22	-	-	1.40	1.96	6.15	-	-	9.50 (3.00-11.00)	2.92 (0.30-3.46)	3.26	9.5	6.1	A++
	5	7	24	-	-	1.32	1.85	6.33	-	-	9.50 (3.00-11.00)	2.92 (0.30-3.46)	3.26	9.5	6.1	A++
	5	9	14	-	-	1.43	2.57	4.00	-	-	8.00 (3.00-10.00)	2.36 (0.30-2.98)	3.38	8.0	6.3	A++
	5	9	18	-	-	1.41	2.53	5.06	-	-	9.00 (3.00-11.00)	2.69 (0.30-3.46)	3.35	9.0	6.2	A++
	5	9	22	-	-	1.32	2.38	5.81	-	-	9.50 (3.00-11.00)	2.92 (0.30-3.46)	3.26	9.5	6.1	A++
	5	9	24	-	-	1.25	2.25	6.00	-	-	9.50 (3.00-11.00)	2.92 (0.30-3.46)	3.26	9.5	6.1	A++
	5	12	12	-	-	1.38	3.31	3.31	-	-	8.00 (3.00-10.40)	2.47 (0.30-3.13)	3.23	8.5	6.2	A++
	5	12	14	-	-	1.45	3.48	4.06	-	-	9.00 (3.00-11.00)	2.69 (0.30-3.46)	3.35	9.0	6.2	A++
	5	12	18	-	-	1.36	3.26	4.89	-	-	9.50 (3.00-11.00)	2.92 (0.30-3.46)	3.26	9.5	6.1	A++
	5	12	22	-	-	1.22	2.92	5.36	-	-	9.50 (3.00-11.00)	2.92 (0.30-3.46)	3.26	9.5	6.1	A++
	5	12	24	-	-	1.16	2.78	5.56	-	-	9.50 (3.00-11.00)	2.92 (0.30-3.46)	3.26	9.5	6.1	A++
	5	14	14	-	-	1.44	4.03	4.03	-	-	9.50 (3.00-11.00)	2.92 (0.30-3.46)	3.26	9.5	6.1	A++
	5	14	18	-	-	1.28	3.59	4.62	-	-	9.50 (3.00-11.00)	2.92 (0.30-3.46)	3.26	9.5	6.1	A++
	5	14	22	-	-	1.16	3.24	5.10	-	-	9.50 (3.00-11.00)	2.92 (0.30-3.46)	3.26	9.5	6.1	A++
	5	14	24	-	-	1.10	3.09	5.30	-	-	9.50 (3.00-11.00)	2.92 (0.30-3.46)	3.26	9.5	6.1	A++
	5	18	18	-	-	1.16	4.17	4.17	-	-	9.50 (3.00-11.00)	2.92 (0.30-3.46)	3.26	9.5	6.1	A++
	5	18	22	-	-	1.06	3.80	4.64	-	-	9.50 (3.00-11.00)	2.92 (0.30-3.46)	3.26	9.5	6.1	A++
	5	18	24	-	-	1.01	3.64	4.85	-	-	9.50 (3.00-11.00)	2.92 (0.30-3.46)	3.26	9.5	6.1	A++
	5	22	22	-	-	0.97	4.27	4.27	-	-	9.50 (3.00-11.00)	2.92 (0.30-3.46)	3.26	9.5	6.1	A++
	5	22	24	-	-	0.93	4.10	4.47	-	-	9.50 (3.00-11.00)	2.92 (0.30-3.46)	3.26	9.5	6.1	A++
	5	24	24	-	-	0.90	4.30	4.30	-	-	9.50 (3.00-11.00)	2.92 (0.30-3.46)	3.25	9.5	6.1	A++
	7	7	14	-	-	2.00	2.00	4.00	-	-	8.00 (3.0-10.0)	2.26 (0.30-2.88)	3.54	8.0	8.2	A++
	7	7	18	-	-	2.00	2.00	5.00	-	-	9.00 (3.0-11.0)	2.68 (0.30-3.45)	3.36	9.0	8.1	A++
	7	7	22	-	-	1.85	1.85	5.80	-	-	9.50 (3.0-11.0)	2.91 (0.30-3.45)	3.27	9.5	8.0	A++
	7	7	24	-	-	1.75	1.75	6.00	-	-	9.50 (3.0-11.0)	2.91 (0.30-3.45)	3.27	9.5	8.0	A++
	7	9	12	-	-	2.00	2.50	3.50	-	-	8.00 (3.0-10.0)	2.26 (0.30-2.88)	3.54	8.0	8.2	A++
	7	9	14	-	-	2.00	2.50	4.00	-	-	8.50 (3.0-10.7)	2.46 (0.30-3.27)	3.45	8.5	8.1	A++
	7	9	18	-	-	2.00	2.50	5.00	-	-	9.50 (3.0-11.0)	2.91 (0.30-3.45)	3.27	9.5	8.0	A++
	7	9	22	-	-	1.75	2.25	5.50	-	-	9.50 (3.0-11.0)	2.91 (0.30-3.45)	3.27	9.5	8.0	A++
	7	9	24	-	-	1.66	2.14	5.70	-	-	9.50 (3.0-11.0)	2.91 (0.30-3.45)	3.27	9.5	8.0	A++
	7	12	12	-	-	2.00	3.50	3.50	-	-	9.00 (3.0-11.0)	2.68 (0.30-3.45)	3.36	9.0	8.1	A++
	7	12	14	-	-	2.00	3.50	4.00	-	-	9.50 (3.0-11.0)	2.91 (0.30-3.45)	3.27	9.5	8.0	A++
	7	12	18	-	-	1.80	3.08	4.62	-	-	9.50 (3.0-11.0)	2.91 (0.30-3.45)	3.27	9.5	8.0	A++
	7	12	22	-	-	1.62	2.78	5.10	-	-	9.50 (3.0-11.0)	2.91 (0.30-3.45)	3.27	9.5	8.0	A++
	7	12	24	-	-	1.55	2.65	5.30	-	-	9.50 (3.0-11.0)	2.91 (0.30-3.45)	3.27	9.5	8.0	A++
	7	14	14	-	-	1.90	3.80	3.80	-	-	9.50 (3.0-11.0)	2.91 (0.30-3.45)	3.27	9.5	8.0	A++
	7	14	18	-	-	1.71	3.41	4.38	-	-	9.50 (3.0-11.0)	2.91 (0.30-3.45)	3.27	9.5	8.0	A++
	7	14	22	-	-	1.55	3.09	4.86	-	-	9.50 (3.0-11.0)	2.91 (0.30-3.45)	3.27	9.5	8.0	A++
	7	14	24	-	-	1.47	2.96	5.07	-	-	9.50 (3.0-11.0)	2.91 (0.30-3.45)	3.27	9.5	8.0	A++
	7	18	18	-	-	1.54	3.98	3.98	-	-	9.50 (3.0-11.0)	2.91 (0.30-3.45)	3.27	9.5	8.0	A++
	7	18	22	-	-	1.41	3.64	4.45	-	-	9.50 (3.0-11.0)	2.91 (0.30-3.45)	3.27	9.5	8.0	A++
	7	18	24	-	-	1.36	3.49	4.65	-	-	9.50 (3.0-11.0)	2.91 (0.30-3.45)	3.27	9.5	8.0	A++
	9	9	9	-	-	2.50	2.50	2.50	-	-	7.50 (3.0-9.6)	2.07 (0.30-2.70)	3.63	7.5	8.2	A+++
	9	9	12	-	-	2.50	2.50	3.50	-	-	8.50 (3.0-10.7)	2.46 (0.30-3.27)	3.45	8.5	8.1	A++
	9	9	14	-	-	2.50	2.50	4.00	-	-	9.00 (3.0-11.0)	2.68 (0.30-3.45)	3.36	9.0	8.1	A++
	9	9	18	-	-	2.38	2.38	4.74	-	-	9.50 (3.0-11.0)	2.91 (0.30-3.45)	3.27	9.5	8.0	A++
	9	9	22	-	-	2.14	2.14	5.22	-	-	9.50 (3.0-11.0)	2.91 (0.30-3.45)	3.27	9.5	8.0	A++
	9	9	24	-	-	2.04	2.04	5.42	-	-	9.50 (3.0-11.0)	2.91 (0.30-3.45)	3.27	9.5	8.0	A++
	9	12	12	-	-	2.50	3.50	3.50	-	-	9.50 (3.0-11.0)	2.91 (0.30-3.45)	3.27	9.5	8.0	A++
	9	12	14	-	-	2.44	3.26	3.80	-	-	9.50 (3.0-11.0)	2.91 (0.30-3.45)	3.27	9.5	8.0	A++
	9	12	18	-	-	2.19	2.92	4.39	-	-	9.50 (3.0-11.0)	2.91 (0.30-3.45)	3.27	9.5	8.0	A++
	9	12	22	-	-	1.99	2.65	4.86	-	-	9.50 (3.0-11.0)	2.91 (0.30-3.45)	3.27	9.5	8.0	A++
	9	12	24	-	-	1.90	2.53	5.07	-	-	9.50 (3.0-11.0)	2.91 (0.30-3.45)	3.27	9.5	8.0	A++
	9	14	14	-	-	2.32	3.59	3.59	-	-	9.50 (3.0-11.0)	2.91 (0.30-3.45)	3.27	9.5	8.0	A++
	9	14	18	-	-	2.09	3.24	4.17	-	-	9.50 (3.0-11.0)	2.91 (0.30-3.45)	3.27	9.5	8.0	A++
	9	14	22	-	-	1.90	2.96	4.64	-	-	9.50 (3.0-11.0)	2.91 (0.30-3.45)	3.27	9.5	8.0	A++
	9	14	24	-	-	1.82	2.83	4.85	-	-	9.50 (3.0-11.0)	2.91 (0.30-3.45)	3.27	9.5	8.0	A++
	9	18	18	-	-	1.90	3.80	3.80	-	-	9.50 (3.0-11.0)	2.91 (0.30-3.45)	3.27	9.5	8.0	A++
	9	18	22	-	-	1.74	3.49	4.27	-	-	9.50 (3.0-11.0)	2.91 (0.30-3.45)	3.27	9.5	8.0	A++
	9	18	24	-	-	1.68	3.35	4.47	-	-	9.50 (3.0-11.0)	2.91 (0.30-3.45)	3.27	9.5	8.0	A++
	12	12	12	-	-	3.17	3.17	3.17	-	-	9.50 (3.0-11.0)	2.91 (0.30-3.45)	3.27	9.5	8.0	A++
	12	12	14	-	-	3.00	3.00	3.50	-	-	9.50 (3.0-11.0)	2.91 (0.30-3.45)	3.27	9.5	8.0	A++
	12	12	18	-	-	2.71	2.71	4.08	-	-	9.50 (3.0-11.0)	2.91 (0.30-3.45)	3.27	9.5	8.0	A++
	12	12	22	-	-	2.48	2.48	4.54	-	-	9.50 (3.0-11.0)	2.91 (0.30-3.45)	3.27	9.5	8.0	A++
	12	12	24	-	-	2.38	2.38	4.74	-	-	9.50 (3.0-11.0)	2.91 (0.30-3.45)	3.27	9.5	8.0	A++
	12	14	14	-	-	2.84	3.33	3.33	-	-	9.50 (3.0-11.0)	2.91 (0.30-3.45)	3.27	9.5	8.0	A++
	12	14	18	-	-	2.59	3.02	3.89	-	-	9.50 (3.0-11.0)	2.91 (0.30-3.45)	3.27	9.5	8.0	A++
	12	14	22	-	-	2.38	2.77	4.35	-	-	9.50 (3.0-11.0)	2.91 (0.30-3.45)	3.27	9.5	8.0	A++
	12	14	24	-	-	2.28	2.66	4.56	-	-	9.50 (3.0-11.0)	2.91 (0.30-3.45)	3.27	9.5	8.0	A++
	12	18	18	-	-	2.38	3.56	3.56	-	-	9.50 (3.0-11.0)	2.91 (0.30-3.45)	3.27	9.5	8.0	A++
	12	18	22	-	-	2.19	3.29	4.02	-	-	9.50 (3.0-11.0)	2.91 (0.30-3.45)	3.27	9.5	8.0	A++
	12	18	24	-	-	2.11	3.17	4.22	-	-	9.50 (3.0-11.0)	2.91 (0.30-3.45)	3.27	9.5	8.0	A++
	14	14	14	-	-	3.17	3.17	3.17	-	-	9.50 (3.0-11.0)	2.91 (0.30-3.45)	3.27	9.5	8.0	A++
	14	14	18	-	-	2.89	2.89	3.72	-	-	9.50 (3.0-11.0)	2.91 (0.30-3.45)	3.27	9.5	8.0	A++
	14	14	22	-	-	2.66	2.66	4.18	-	-	9.50 (3.0-11.0)	2.91 (0.30-3.45)	3.27	9.5	8.0	A++
	14	14	24	-	-	2.56	2.56	4.38	-	-	9.50 (3.0-11.0)	2.91 (0.30-3.45)	3.27	9.5	8.0	A++
	14	18	18	-	-	2.66	3.42	3.42	-	-	9.50 (3.0-11.0)	2.91 (0.30-3.45)	3.27	9.5	8.0	A++
	18	18	18	-	-	3.17	3.17	3.17	-	-	9.50 (3.0-11.0)	2.91 (0.30-3.45)	3.27	9.5	8.0	A++
4-unit connection	5	5	5	12	-	1.39	1.39	1.39	3.33	-	7.50 (3.00-9.60)	2.11 (0.30-2.84)	3.55	8.0	6.5	A++
	5	5	5	14	-	1.38	1.38	1.38	3.86	-	8.00 (3.00-10.40)	2.31 (0.30-3.13)	3.47	8.5	6.4	A++
	5	5	5	18	-	1.44	1.44	1.44	5.18	-	9.50 (3.00-11.00)	2.70 (0.30-3.46)	3.52	9.5	6.3	A++
	5	5	5	22	-	1.28	1.28	1.28	5.65	-	9.50 (3.00-11.00)	2.70 (0.30-3.46)	3.52	9.5	6.3	A++
	5	5	5	24	-	1.22	1.22	1.22	5.85	-	9.50 (3.00-11.00)	2.70 (0.30-3.46)	3.52	9.5	6.3	A++
	5	5	7	12	-	1.38	1.38	1.93	3.31	-	8.00 (3.00-10.40)	2.31 (0.30-3.13)	3.47	8.5	6.4	A++
	5	5	7	14	-	1.45	1.45	2.03	4.06	-	9.00 (3.00-11.00)	2.50 (0.30-3.46)	3.59	9.0	6.4	A++
	5	5	7	18	-	1.36	1.36	1.90	4.89	-	9.50 (3.00-11.00)	2.70 (0.30-3.46)	3.52	9.5	6.3	A++
	5	5	7	22	-	1.22	1.22	1.71	5.36	-	9.50 (3.00-11.00)	2.70 (0.30-3.46)	3.52	9.5	6.3	A++
	5	5	7	24	-	1.16	1.16	1.62	5.56	-	9.50 (3.00-11.00)	2.70 (0.30-3.46)	3.52	9.5	6.3	A++
	5	5	9	9	-	1.43	1.43	2.57	2.57	-	8.00 (3.00-10.00)	2.21 (0.30-2.98)	3.62	8.0	6.5	A+++
	5	5	9	12	-	1.45	1.45	2.61	3.48	-	9.00 (3.00-11.00)	2.50 (0.30-3.46)	3.59	9.0	6.4	A++
	5	5	9	14	-	1.44	1.44	2.59	4.03	-	9.50 (3.00-11.00)	2.70 (0.30-3.46)	3.52	9.5	6.3	A++
	5	5	9	18	-	1.28	1.28	2.31	4.62	-	9.50 (3.00-11.00)	2.70 (0.30-3.46)	3.52	9.5	6.3	A++
	5	5	9	22	-	1.16	1.16	2.09	5.10	-	9.50 (3.00-11.00)	2.70 (0.30-3.46)	3.52	9.5	6.3	A++
	5	5	9	24	-	1.10	1.10	1.99	5.30	-	9.50 (3.00-11.00)	2.70 (0.30-3.46)	3.52	9.5	6.3	A++
	5	5	12	12	-	1.40	1.40	3.35	3.35	-	9.50 (3.00-11.00)	2.70 (0.30-3.46)	3.52	9.5	6.3	A++
	5	5	12	14	-	1.32	1.32	3.17	3.69	-	9.50 (3.00-11.00)	2.70 (0.30-3.46)	3.52	9.5	6.3	A++

5-unit Multi-split cooling

AOEG36KBTA5	Combination of Indoor Units					Cooling Operation										
						Cooling Capacity						Input Power (Min. - Max.)	EER	Seasonal Data		
						Unit 1	Unit 2	Unit 3	Unit 4	Unit 5	Total Capacity (Min. - Max.)			Pdesign	SEER	Energy efficiency
						kW	kW	kW	kW	kW	kW	kW		kW		
4-unit connection	5	5	12	18	-	1.19	1.19	2.85	4.28	-	9.50 (3.00-11.00)	2.70 (0.30-3.46)	3.52	9.5	6.3	A++
	5	5	12	22	-	1.08	1.08	2.59	4.75	-	9.50 (3.00-11.00)	2.70 (0.30-3.46)	3.52	9.5	6.3	A++
	5	5	12	24	-	1.03	1.03	2.48	4.96	-	9.50 (3.00-11.00)	2.70 (0.30-3.46)	3.52	9.5	6.3	A++
	5	5	14	14	-	1.25	1.25	3.50	3.50	-	9.50 (3.00-11.00)	2.70 (0.30-3.46)	3.52	9.5	6.3	A++
	5	5	14	18	-	1.13	1.13	3.17	4.07	-	9.50 (3.00-11.00)	2.70 (0.30-3.46)	3.52	9.5	6.3	A++
	5	5	14	22	-	1.03	1.03	2.89	4.54	-	9.50 (3.00-11.00)	2.70 (0.30-3.46)	3.52	9.5	6.3	A++
	5	5	14	24	-	0.99	0.99	2.77	4.75	-	9.50 (3.00-11.00)	2.70 (0.30-3.46)	3.52	9.5	6.3	A++
	5	5	18	18	-	1.03	1.03	3.72	3.72	-	9.50 (3.00-11.00)	2.70 (0.30-3.46)	3.52	9.5	6.3	A++
	5	5	18	22	-	0.95	0.95	3.42	4.18	-	9.50 (3.00-11.00)	2.70 (0.30-3.46)	3.52	9.5	6.3	A++
	5	5	18	24	-	0.91	0.91	3.29	4.38	-	9.50 (3.00-11.00)	2.70 (0.30-3.46)	3.52	9.5	6.3	A++
	5	7	7	9	-	1.43	2.00	2.00	2.57	-	8.00 (3.00-10.00)	2.21 (0.30-2.98)	3.62	9.0	6.4	A++
	5	7	7	12	-	1.45	2.03	2.03	3.48	-	9.00 (3.00-11.00)	2.50 (0.30-3.46)	3.59	9.0	6.3	A++
	5	7	7	14	-	1.44	2.02	2.02	4.03	-	9.50 (3.00-11.00)	2.70 (0.30-3.46)	3.52	9.5	6.3	A++
	5	7	7	18	-	1.28	1.80	1.80	4.62	-	9.50 (3.00-11.00)	2.70 (0.30-3.46)	3.52	9.5	6.3	A++
	5	7	7	22	-	1.16	1.62	1.62	5.10	-	9.50 (3.00-11.00)	2.70 (0.30-3.46)	3.52	9.5	6.3	A++
	5	7	7	24	-	1.10	1.55	1.55	5.30	-	9.50 (3.00-11.00)	2.70 (0.30-3.46)	3.52	9.5	6.3	A++
	5	7	9	9	-	1.42	1.98	2.55	2.55	-	8.50 (3.00-10.70)	2.41 (0.30-3.28)	3.53	9.5	6.3	A++
	5	7	9	12	-	1.44	2.02	2.59	3.45	-	9.50 (3.00-11.00)	2.70 (0.30-3.46)	3.52	9.5	6.3	A++
	5	7	9	14	-	1.36	1.90	2.44	3.80	-	9.50 (3.00-11.00)	2.70 (0.30-3.46)	3.52	9.5	6.3	A++
	5	7	9	18	-	1.22	1.71	2.19	4.38	-	9.50 (3.00-11.00)	2.70 (0.30-3.46)	3.52	9.5	6.3	A++
	5	7	9	22	-	1.10	1.55	1.99	4.86	-	9.50 (3.00-11.00)	2.70 (0.30-3.46)	3.52	9.5	6.3	A++
	5	7	9	24	-	1.06	1.48	1.90	5.07	-	9.50 (3.00-11.00)	2.70 (0.30-3.46)	3.52	9.5	6.3	A++
	5	7	12	12	-	1.32	1.85	3.17	3.17	-	9.50 (3.00-11.00)	2.70 (0.30-3.46)	3.52	9.5	6.3	A++
	5	7	12	14	-	1.25	1.75	3.00	3.50	-	9.50 (3.00-11.00)	2.70 (0.30-3.46)	3.52	9.5	6.3	A++
	5	7	12	18	-	1.13	1.58	2.71	4.07	-	9.50 (3.00-11.00)	2.70 (0.30-3.46)	3.52	9.5	6.3	A++
	5	7	12	22	-	1.03	1.45	2.48	4.54	-	9.50 (3.00-11.00)	2.70 (0.30-3.46)	3.52	9.5	6.3	A++
	5	7	12	24	-	0.99	1.39	2.38	4.75	-	9.50 (3.00-11.00)	2.70 (0.30-3.46)	3.52	9.5	6.3	A++
	5	7	14	14	-	1.19	1.66	3.33	3.33	-	9.50 (3.00-11.00)	2.70 (0.30-3.46)	3.52	9.5	6.3	A++
	5	7	14	18	-	1.08	1.51	3.02	3.89	-	9.50 (3.00-11.00)	2.70 (0.30-3.46)	3.52	9.5	6.3	A++
	5	7	14	22	-	0.99	1.39	2.77	4.35	-	9.50 (3.00-11.00)	2.70 (0.30-3.46)	3.52	9.5	6.3	A++
	5	7	14	24	-	0.95	1.33	2.66	4.56	-	9.50 (3.00-11.00)	2.70 (0.30-3.46)	3.52	9.5	6.3	A++
	5	7	18	18	-	0.99	1.39	3.56	3.56	-	9.50 (3.00-11.00)	2.70 (0.30-3.46)	3.52	9.5	6.3	A++
	5	7	18	22	-	0.91	1.28	3.29	4.02	-	9.50 (3.00-11.00)	2.70 (0.30-3.46)	3.52	9.5	6.3	A++
	5	7	18	24	-	0.88	1.23	3.17	4.22	-	9.50 (3.00-11.00)	2.70 (0.30-3.46)	3.52	9.0	6.4	A++
	5	9	9	9	-	1.41	2.53	2.53	2.53	-	9.00 (3.00-11.00)	2.50 (0.30-3.46)	3.61	9.5	6.3	A++
	5	9	9	12	-	1.36	2.44	2.44	3.26	-	9.50 (3.00-11.00)	2.70 (0.30-3.46)	3.52	9.5	6.3	A++
	5	9	9	14	-	1.28	2.31	2.31	3.59	-	9.50 (3.00-11.00)	2.70 (0.30-3.46)	3.52	9.5	6.3	A++
	5	9	9	18	-	1.16	2.09	2.09	4.17	-	9.50 (3.00-11.00)	2.70 (0.30-3.46)	3.52	9.5	6.3	A++
	5	9	9	22	-	1.06	1.90	1.90	4.64	-	9.50 (3.00-11.00)	2.70 (0.30-3.46)	3.52	9.5	6.3	A++
	5	9	9	24	-	1.01	1.82	1.82	4.85	-	9.50 (3.00-11.00)	2.70 (0.30-3.46)	3.52	9.5	6.3	A++
	5	9	12	12	-	1.25	2.25	3.00	3.00	-	9.50 (3.00-11.00)	2.70 (0.30-3.46)	3.52	9.5	6.3	A++
	5	9	12	14	-	1.19	2.14	2.85	3.33	-	9.50 (3.00-11.00)	2.70 (0.30-3.46)	3.52	9.5	6.3	A++
	5	9	12	18	-	1.08	1.94	2.59	3.89	-	9.50 (3.00-11.00)	2.70 (0.30-3.46)	3.52	9.5	6.3	A++
	5	9	12	22	-	0.99	1.78	2.38	4.35	-	9.50 (3.00-11.00)	2.70 (0.30-3.46)	3.52	9.5	6.3	A++
	5	9	12	24	-	0.95	1.71	2.28	4.56	-	9.50 (3.00-11.00)	2.70 (0.30-3.46)	3.52	9.5	6.3	A++
	5	9	14	14	-	1.13	2.04	3.17	3.17	-	9.50 (3.00-11.00)	2.70 (0.30-3.46)	3.52	9.5	6.3	A++

5-unit Multi-split Combination Table–Cooling

The data in the table below shows the performance of various combinations of indoor and outdoor units of different capacities, using the most efficient type of indoor unit.
These values should not be interpreted as official declarations for tax incentives or other certifications.
For more information on specific types of indoor and outdoor unit combinations, please refer to the Design & Technical Manual.

REFRIGERANT R32

5-unit Multi-split cooling

AOEG36KBTA5	Combination of Indoor Units					Cooling Operation									
						Cooling Capacity						Input Power (Min. - Max.)	EER	Seasonal Data		
						Unit 1	Unit 2	Unit 3	Unit 4	Unit 5	Total Capacity (Min. - Max.)			Pdesign	SEER	Energy efficiency
						kW	kW	kW	kW	kW	kW	kW		kW		
4-unit connection	9	9	12	14	-	1.94	1.94	2.59	3.03	-	9.50 (3.0-11.0)	2.69 (0.30-3.45)	3.53	9.5	8.3	A++
	9	9	12	18	-	1.78	1.78	2.38	3.56	-	9.50 (3.0-11.0)	2.69 (0.30-3.45)	3.53	9.5	8.3	A++
	9	9	12	22	-	1.64	1.64	2.19	4.03	-	9.50 (3.0-11.0)	2.69 (0.30-3.45)	3.53	9.5	8.3	A++
	9	9	12	24	-	1.58	1.58	2.11	4.23	-	9.50 (3.0-11.0)	2.69 (0.30-3.45)	3.53	9.5	8.3	A++
	9	9	14	14	-	1.86	1.86	2.89	2.89	-	9.50 (3.0-11.0)	2.69 (0.30-3.45)	3.53	9.5	8.3	A++
	9	9	14	18	-	1.71	1.71	2.66	3.42	-	9.50 (3.0-11.0)	2.69 (0.30-3.45)	3.53	9.5	8.3	A++
	9	9	18	18	-	1.58	1.58	3.17	3.17	-	9.50 (3.0-11.0)	2.69 (0.30-3.45)	3.53	9.5	8.3	A++
	9	12	12	12	-	1.91	2.53	2.53	2.53	-	9.50 (3.0-11.0)	2.69 (0.30-3.45)	3.53	9.5	8.3	A++
	9	12	12	14	-	1.81	2.43	2.43	2.83	-	9.50 (3.0-11.0)	2.69 (0.30-3.45)	3.53	9.5	8.3	A++
	9	12	12	18	-	1.67	2.24	2.24	3.35	-	9.50 (3.0-11.0)	2.69 (0.30-3.45)	3.53	9.5	8.3	A++
	9	12	14	14	-	1.74	2.34	2.71	2.71	-	9.50 (3.0-11.0)	2.69 (0.30-3.45)	3.53	9.5	8.3	A++
	9	12	14	18	-	1.61	2.15	2.51	3.23	-	9.50 (3.0-11.0)	2.69 (0.30-3.45)	3.53	9.5	8.3	A++
	9	14	14	14	-	1.67	2.61	2.61	2.61	-	9.50 (3.0-11.0)	2.69 (0.30-3.45)	3.53	9.5	8.3	A++
	12	12	12	12	-	2.38	2.38	2.38	2.38	-	9.50 (3.0-11.0)	2.69 (0.30-3.45)	3.53	9.5	8.3	A++
	12	12	12	14	-	2.28	2.28	2.28	2.66	-	9.50 (3.0-11.0)	2.69 (0.30-3.45)	3.53	9.5	8.3	A++
	12	12	12	18	-	2.11	2.11	2.11	3.17	-	9.50 (3.0-11.0)	2.69 (0.30-3.45)	3.53	9.5	8.3	A++
	12	12	14	14	-	2.19	2.19	2.56	2.56	-	9.50 (3.0-11.0)	2.69 (0.30-3.45)	3.53	9.5	8.3	A++
	12	14	14	14	-	2.12	2.46	2.46	2.46	-	9.50 (3.0-11.0)	2.69 (0.30-3.45)	3.53	9.5	8.3	A++
5-unit connection	5	5	5	5	7	1.39	1.39	1.39	1.39	1.94	7.50 (3.00-9.60)	1.72 (0.30-2.84)	4.35	8.5	6.6	A++
	5	5	5	5	9	1.38	1.38	1.38	1.38	2.48	8.00 (3.00-10.40)	1.92 (0.30-3.13)	4.17	9.5	6.5	A++
	5	5	5	5	12	1.41	1.41	1.41	1.41	3.38	9.00 (3.00-11.00)	2.21 (0.30-3.46)	4.06	9.5	6.5	A++
	5	5	5	5	14	1.40	1.40	1.40	1.40	3.91	9.50 (3.00-11.00)	2.41 (0.30-3.46)	3.94	9.5	6.5	A++
	5	5	5	5	18	1.25	1.25	1.25	1.25	4.50	9.50 (3.00-11.00)	2.51 (0.30-3.46)	3.78	9.5	6.5	A++
	5	5	5	5	22	1.13	1.13	1.13	1.13	4.98	9.50 (3.00-11.00)	2.51 (0.30-3.46)	3.78	9.5	6.5	A++
	5	5	5	5	24	1.08	1.08	1.08	1.08	5.18	9.50 (3.00-11.00)	2.51 (0.30-3.46)	3.78	8.5	6.6	A++
	5	5	5	7	7	1.38	1.38	1.38	1.93	1.93	8.00 (3.00-10.40)	1.92 (0.30-3.13)	4.17	9.0	6.6	A++
	5	5	5	7	9	1.45	1.45	1.45	2.03	2.61	9.00 (3.00-11.00)	2.12 (0.30-3.46)	4.25	9.5	6.5	A++
	5	5	5	7	12	1.40	1.40	1.40	1.96	3.35	9.50 (3.00-11.00)	2.41 (0.30-3.46)	3.94	9.5	6.5	A++
	5	5	5	7	14	1.32	1.32	1.32	1.85	3.69	9.50 (3.00-11.00)	2.51 (0.30-3.46)	3.78	9.5	6.5	A++
	5	5	5	7	18	1.19	1.19	1.19	1.66	4.28	9.50 (3.00-11.00)	2.51 (0.30-3.46)	3.78	9.5	6.5	A++
	5	5	5	7	22	1.08	1.08	1.08	1.51	4.75	9.50 (3.00-11.00)	2.51 (0.30-3.46)	3.78	9.5	6.5	A++
	5	5	5	7	24	1.03	1.03	1.03	1.45	4.96	9.50 (3.00-11.00)	2.51 (0.30-3.46)	3.78	9.5	6.5	A++
	5	5	5	9	9	1.44	1.44	1.44	2.59	2.59	9.50 (3.00-11.00)	2.31 (0.30-3.46)	4.11	9.5	6.5	A++
	5	5	5	9	12	1.32	1.32	1.32	2.38	3.17	9.50 (3.00-11.00)	2.51 (0.30-3.46)	3.78	9.5	6.5	A++
	5	5	5	9	14	1.25	1.25	1.25	2.25	3.50	9.50 (3.00-11.00)	2.51 (0.30-3.46)	3.78	9.5	6.5	A++
	5	5	5	9	18	1.13	1.13	1.13	2.04	4.07	9.50 (3.00-11.00)	2.51 (0.30-3.46)	3.78	9.5	6.5	A++
	5	5	5	9	22	1.03	1.03	1.03	1.86	4.54	9.50 (3.00-11.00)	2.51 (0.30-3.46)	3.78	9.5	6.5	A++
	5	5	5	9	24	0.99	0.99	0.99	1.78	4.75	9.50 (3.00-11.00)	2.51 (0.30-3.46)	3.78	9.5	6.5	A++
	5	5	5	12	12	1.22	1.22	1.22	2.92	2.92	9.50 (3.00-11.00)	2.51 (0.30-3.46)	3.78	9.5	6.5	A++
	5	5	5	12	14	1.16	1.16	1.16	2.78	3.24	9.50 (3.00-11.00)	2.51 (0.30-3.46)	3.78	9.5	6.5	A++
	5	5	5	12	18	1.06	1.06	1.06	2.53	3.80	9.50 (3.00-11.00)	2.51 (0.30-3.46)	3.78	9.5	6.5	A++
	5	5	5	12	22	0.97	0.97	0.97	2.33	4.27	9.50 (3.00-11.00)	2.51 (0.30-3.46)	3.78	9.5	6.5	A++
	5	5	5	12	24	0.93	0.93	0.93	2.24	4.47	9.50 (3.00-11.00)	2.51 (0.30-3.46)	3.78	9.5	6.5	A++
	5	5	5	14	14	1.10	1.10	1.10	3.09	3.09	9.50 (3.00-11.00)	2.51 (0.30-3.46)	3.78	9.5	6.5	A++
	5	5	5	14	18	1.01	1.01	1.01	2.83	3.64	9.50 (3.00-11.00)	2.51 (0.30-3.46)	3.78	9.5	6.5	A++
	5	5	5	14	22	0.93	0.93	0.93	2.61	4.10	9.50 (3.00-11.00)	2.51 (0.30-3.46)	3.78	9.5	6.5	A++
	5	5	5	14	24	0.90	0.90	0.90	2.51	4.30	9.50 (3.00-11.00)	2.51 (0.30-3.46)	3.78	9.5	6.5	A++
	5	5	5	18	18	0.93	0.93	0.93	3.35	3.35	9.50 (3.00-11.00)	2.51 (0.30-3.46)	3.78	9.0	6.6	A++
	5	5	7	7	7	1.45	1.45	2.03	2.03	2.03	9.00 (3.00-11.00)	2.12 (0.30-3.46)	4.25	9.5	6.5	A++
	5	5	7	7	9	1.44	1.44	2.02	2.02	2.59	9.50 (3.00-11.00)	2.31 (0.30-3.46)	4.11	9.5	6.5	A++
	5	5	7	7	12	1.32	1.32	1.85	1.85	3.17	9.50 (3.00-11.00)	2.51 (0.30-3.46)	3.78	9.5	6.5	A++
	5	5	7	7	14	1.25	1.25	1.75	1.75	3.50	9.50 (3.00-11.00)	2.51 (0.30-3.46)	3.78	9.5	6.5	A++
	5	5	7	7	18	1.13	1.13	1.58	1.58	4.07	9.50 (3.00-11.00)	2.51 (0.30-3.46)	3.78	9.5	6.5	A++
	5	5	7	7	22	1.03	1.03	1.45	1.45	4.54	9.50 (3.00-11.00)	2.51 (0.30-3.46)	3.78	9.5	6.5	A++
	5	5	7	7	24	0.99	0.99	1.39	1.39	4.75	9.50 (3.00-11.00)	2.51 (0.30-3.46)	3.78	9.5	6.5	A++
	5	5	7	9	9	1.36	1.36	1.90	2.44	2.44	9.50 (3.00-11.00)	2.51 (0.30-3.46)	3.78	9.5	6.5	A++
	5	5	7	9	12	1.25	1.25	1.75	2.25	3.00	9.50 (3.00-11.00)	2.51 (0.30-3.46)	3.78	9.5	6.5	A++
	5	5	7	9	14	1.19	1.19	1.66	2.14	3.33	9.50 (3.00-11.00)	2.51 (0.30-3.46)	3.78	9.5	6.5	A++
	5	5	7	9	18	1.08	1.08	1.51	1.94	3.89	9.50 (3.00-11.00)	2.51 (0.30-3.46)	3.78	9.5	6.5	A++
	5	5	7	9	22	0.99	0.99	1.39	1.78	4.35	9.50 (3.00-11.00)	2.51 (0.30-3.46)	3.78	9.5	6.5	A++
	5	5	7	9	24	0.95	0.95	1.33	1.71	4.56	9.50 (3.00-11.00)	2.51 (0.30-3.46)	3.78	9.5	6.5	A++
	5	5	7	12	12	1.16	1.16	1.62	2.78	2.78	9.50 (3.00-11.00)	2.51 (0.30-3.46)	3.78	9.5	6.5	A++
	5	5	7	12	14	1.10	1.10	1.55	2.65	3.09	9.50 (3.00-11.00)	2.51 (0.30-3.46)	3.78	9.5	6.5	A++
	5	5	7	12	18	1.01	1.01	1.41	2.43	3.64	9.50 (3.00-11.00)	2.51 (0.30-3.46)	3.78	9.5	6.5	A++
	5	5	7	12	22	0.93	0.93	1.30	2.24	4.10	9.50 (3.00-11.00)	2.51 (0.30-3.46)	3.78	9.5	6.5	A++
	5	5	7	12	24	0.90	0.90	1.25	2.15	4.30	9.50 (3.00-11.00)	2.51 (0.30-3.46)	3.78	9.5	6.5	A++
	5	5	7	14	14	1.06	1.06	1.48	2.96	2.96	9.50 (3.00-11.00)	2.51 (0.30-3.46)	3.78	9.5	6.5	A++
	5	5	7	14	18	0.97	0.97	1.36	2.71	3.49	9.50 (3.00-11.00)	2.51 (0.30-3.46)	3.78	9.5	6.5	A++
	5	5	7	14	22	0.90	0.90	1.25	2.51	3.94	9.50 (3.00-11.00)	2.51 (0.30-3.46)	3.78	9.5	6.5	A++
	5	5	7	18	18	0.90	0.90	1.25	3.23	3.23	9.50 (3.00-11.00)	2.51 (0.30-3.46)	3.78	9.5	6.5	A++
	5	5	9	9	9	1.28	1.28	2.31	2.31	2.31	9.50 (3.00-11.00)	2.51 (0.30-3.46)	3.78	9.5	6.5	A++
	5	5	9	9	12	1.19	1.19	2.14	2.14	2.85	9.50 (3.00-11.00)	2.51 (0.30-3.46)	3.78	9.5	6.5	A++
	5	5	9	9	14	1.13	1.13	2.04	2.04	3.17	9.50 (3.00-11.00)	2.51 (0.30-3.46)	3.78	9.5	6.5	A++
	5	5	9	9	18	1.03	1.03	1.86	1.86	3.72	9.50 (3.00-11.00)	2.51 (0.30-3.46)	3.78	9.5	6.5	A++
	5	5	9	9	22	0.95	0.95	1.71	1.71	4.18	9.50 (3.00-11.00)	2.51 (0.30-3.46)	3.78	9.5	6.5	A++
	5	5	9	9	24	0.91	0.91	1.64	1.64	4.38	9.50 (3.00-11.00)	2.51 (0.30-3.46)	3.78	9.5	6.5	A++
	5	5	9	12	12	1.10	1.10	1.99	2.65	2.65	9.50 (3.00-11.00)	2.51 (0.30-3.46)	3.78	9.5	6.5	A++
	5	5	9	12	14	1.06	1.06	1.90	2.53	2.96	9.50 (3.00-11.00)	2.51 (0.30-3.46)	3.78	9.5	6.5	A++
	5	5	9	12	18	0.97	0.97	1.74	2.33	3.49	9.50 (3.00-11.00)	2.51 (0.30-3.46)	3.78	9.5	6.5	A++
	5	5	9	12	22	0.90	0.90	1.61	2.15	3.94	9.50 (3.00-11.00)	2.51 (0.30-3.46)	3.78	9.5	6.5	A++
	5	5	9	14	14	1.01	1.01	1.82	2.83	2.83	9.50 (3.00-11.00)	2.51 (0.30-3.46)	3.78	9.5	6.5	A++
	5	5	9	14	18	0.93	0.93	1.68	2.61	3.35	9.50 (3.00-11.00)	2.51 (0.30-3.46)	3.78	9.5	6.5	A++
	5	5	12	12	12	1.03	1.03	2.48	2.48	2.48	9.50 (3.00-11.00)	2.51 (0.30-3.46)	3.78	9.5	6.5	A++
	5	5	12	12	14	0.99	0.99	2.38	2.38	2.77	9.50 (3.00-11.00)	2.51 (0.30-3.46)	3.78	9.5	6.5	A++
	5	5	12	12	18	0.91	0.91	2.19	2.19	3.29	9.50 (3.00-11.00)	2.51 (0.30-3.46)	3.78	9.5	6.5	A++
	5	5	12	14	14	0.95	0.95	2.28	2.66	2.66	9.50 (3.00-11.00)	2.51 (0.30-3.46)	3.78	9.5	6.5	A++
	5	5	12	14	18	0.88	0.88	2.11	2.46	3.17	9.50 (3.00-11.00)	2.51 (0.30-3.46)	3.78	9.5	6.5	A++
	5	5	14	14	14	0.91	0.91	2.56	2.56	2.56	9.50 (3.00-11.00)	2.51 (0.30-3.46)	3.78	9.5	6.5	A++
	5	7	7	7	7	1.44	2.02	2.02	2.02	2.02	9.50 (3.00-11.00)	2.31 (0.30-3.46)	4.11	9.5	6.5	A++
	5	7	7	7	9	1.36	1.90	1.90	1.90	2.44	9.50 (3.00-11.00)	2.51 (0.30-3.46)	3.78	9.5	6.5	A++
	5	7	7	7	12	1.25	1.75	1.75	1.75	3.00	9.50 (3.00-11.00)	2.51 (0.30-3.46)	3.78	9.5	6.5	A++
	5	7	7	7	14	1.19	1.66	1.66	1.66	3.33	9.50 (3.00-11.00)	2.51 (0.30-3.46)	3.78	9.5	6.5	A++
	5	7	7	7	18	1.08	1.51	1.51	1.51	3.89	9.50 (3.00-11.00)	2.51 (0.30-3.46)	3.78	9.5	6.5	A++
	5	7	7	7	22	0.99	1.39	1.39	1.39	4.35	9.50 (3.00-11.00)	2.51 (0.30-3.46)	3.78	9.5	6.5	A++
	5	7	7	7	24	0.95	1.33	1.33	1.33	4.56	9.50 (3.00-11.00)	2.51 (0.30-3.46)	3.78	9.5	6.5	A++
	5	7	7	9	9	1.28	1.80	1.80	2.31	2.31	9.50 (3.00-11.00)	2.51 (0.30-3.46)	3.78	9.5	6.5	A++
	5	7	7	9	12	1.19	1.66	1.66	2.14	2.85	9.50 (3.00-11.00)	2.51 (0.30-3.46)	3.78	9.5	6.5	A++
	5	7	7	9	14	1.13	1.58	1.58	2.04	3.17	9.50 (3.00-11.00)	2.51 (0.30-3.46)	3.78	9.5	6.5	A++
	5	7	7	9	18	1.03	1.45	1.45	1.86	3.72	9.50 (3.00-11.00)	2.51 (0.30-3.46)	3.78	9.5	6.5	A++
	5	7	7	9	22	0.95	1.33	1.33	1.71	4.18	9.50 (3.00-11.00)	2.51 (0.30-3.46)	3.78	9.5	6.5	A++
	5	7	7	9	24	0.91	1.28	1.28	1.64	4.38	9.50 (3.00-11.00)	2.51 (0.30-3.46)	3.78	9.5	6.5	A++
	5	7	7	12	12	1.10	1.55	1.55	2.65	2.65	9.50 (3.00-11.00)	2.51 (0.30-3.46)	3.78	9.5	6.5	A++
	5	7	7	12	14	1.06	1.48	1.48	2.53	2.96	9.50 (3.00-11.00)	2.51 (0.30-3.46)	3.78	9.5	6.5	A++
	5	7	7	12	18	0.97	1.36	1.36	2.33	3.49	9.50 (3.00-11.00)	2.51 (0.30-3.46)	3.78	9.5	6.5	A++
	5	7	7	12	22	0.90	1.25	1.25	2.15	3.94	9.50 (3.00-11.00)	2.51 (0.30-3.46)	3.78	9.5	6.5	A++
	5	7	7	14	14	1.01	1.41	1.41	2.83	2.83	9.50 (3.00-11.00)	2.51 (0.30-3.46)	3.78	9.5	6.5	A++
	5	7	7	14	18	0.93	1.30	1.30	2.61	3.35	9.50 (3.00-11.00)	2.51 (0.30-3.46)	3.78	9.5	6.5	A++
	5	7	9	9	9	1.22	1.71	2.19	2.19	2.19	9.50 (3.00-11.00)	2.51 (0.30-3.46)	3.78	9.5	6.5	A++
	5	7	9	9	12	1.13	1.58	2.04	2.04	2.71	9.50 (3.00-11.00)	2.51 (0.30-3.46)	3.78	9.5	6.5	A++
	5	7	9	9	14	1.08	1.51	1.94	1.94	3.02	9.50 (3.00-11.00)	2.51 (0.30-3.46)	3.78	9.5	6.5	A++
	5	7	9	9	18	0.99	1.39	1.78	1.78	3.56	9.50 (3.00-11.00)	2.51 (0.30-3.46)	3.78	9.5	6.5	A++
	5	7	9	9	22	0.91	1.28	1.64	1.64	4.02	9.50 (3.00-11.00)	2.51 (0.30-3.46)	3.78	9.5	6.5	A++
	5	7	9	9	24	0.88	1.23	1.58	1.58	4.22	9.50 (3.00-11.00)	2.51 (0.30-3.46)	3.78	9.5	6.5	A++
	5	7	9	12	12	1.06	1.48	1.90	2.53	2.53	9.50 (3.00-11.00)	2.51 (0.30-3.46)	3.78	9.5	6.5	A++
	5	7	9	12	14	1.01	1.41	1.82	2.43	2.83	9.50 (3.00-11.00)	2.51 (0.30-3.46)	3.78	9.5	6.5	A++

5-unit Multi-split cooling

AOEG36KBTA5	Combination of Indoor Units					Cooling Operation									
						Cooling Capacity						Input Power (Min. - Max.)	EER	Seasonal Data		
						Unit 1	Unit 2	Unit 3	Unit 4	Unit 5	Total Capacity (Min. - Max.)			Pdesign	SEER	Energy efficiency
						kW	kW	kW	kW	kW	kW	kW		kW		
5-unit connection	5	7	9	12	18	0.93	1.30	1.68	2.24	3.35	9.50 (3.00-11.00)	2.51 (0.30-3.46)	3.78	9.5	6.5	A++
	5	7	9	14	14	0.97	1.36	1.74	2.71	2.71	9.50 (3.00-11.00)	2.51 (0.30-3.46)	3.78	9.5	6.5	A++
	5	7	9	14	18	0.90	1.25	1.61	2.51	3.23	9.50 (3.00-11.00)	2.51 (0.30-3.46)	3.78	9.5	6.5	A++
	5	7	12	12	12	0.99	1.39	2.38	2.38	2.38	9.50 (3.00-11.00)	2.51 (0.30-3.46)	3.78	9.5	6.5	A++
	5	7	12	12	14	0.95	1.33	2.28	2.28	2.66	9.50 (3.00-11.00)	2.51 (0.30-3.46)	3.78	9.5	6.5	A++
	5	7	12	12	18	0.88	1.23	2.11	2.11	3.17	9.50 (3.00-11.00)	2.51 (0.30-3.46)	3.78	9.5	6.5	A++
	5	7	12	14	14	0.91	1.28	2.19	2.56	2.56	9.50 (3.00-11.00)	2.51 (0.30-3.46)	3.78	9.5	6.5	A++
	5	7	14	14	14	0.88	1.23	2.46	2.46	2.46	9.50 (3.00-11.00)	2.51 (0.30-3.46)	3.78	9.5	6.5	A++
	5	9	9	9	9	1.16	2.09	2.09	2.09	2.09	9.50 (3.00-11.00)	2.51 (0.30-3.46)	3.78	9.5	6.5	A++
	5	9	9	9	12	1.08	1.94	1.94	1.94	2.59	9.50 (3.00-11.00)	2.51 (0.30-3.46)	3.78	9.5	6.5	A++
	5	9	9	9	14	1.03	1.86	1.86	1.86	2.89	9.50 (3.00-11.00)	2.51 (0.30-3.46)	3.78	9.5	6.5	A++
	5	9	9	9	18	0.95	1.71	1.71	1.71	3.42	9.50 (3.00-11.00)	2.51 (0.30-3.46)	3.78	9.5	6.5	A++
	5	9	9	9	22	0.88	1.58	1.58	1.58	3.87	9.50 (3.00-11.00)	2.51 (0.30-3.46)	3.78	9.5	6.5	A++
	5	9	9	12	12	1.01	1.82	1.82	2.43	2.43	9.50 (3.00-11.00)	2.51 (0.30-3.46)	3.78	9.5	6.5	A++
	5	9	9	12	14	0.97	1.74	1.74	2.33	2.71	9.50 (3.00-11.00)	2.51 (0.30-3.46)	3.78	9.5	6.5	A++
	5	9	9	12	18	0.90	1.61	1.61	2.15	3.23	9.50 (3.00-11.00)	2.51 (0.30-3.46)	3.78	9.5	6.5	A++
	5	9	9	14	14	0.93	1.68	1.68	2.61	2.61	9.50 (3.00-11.00)	2.51 (0.30-3.46)	3.78	9.5	6.5	A++
	5	9	12	12	12	0.95	1.71	2.28	2.28	2.28	9.50 (3.00-11.00)	2.51 (0.30-3.46)	3.78	9.5	6.5	A++
	5	9	12	12	14	0.91	1.64	2.19	2.19	2.56	9.50 (3.00-11.00)	2.51 (0.30-3.46)	3.78	9.5	6.5	A++
	5	9	12	14	14	0.88	1.58	2.11	2.46	2.46	9.50 (3.00-11.00)	2.51 (0.30-3.46)	3.78	9.5	6.5	A++
	5	12	12	12	12	0.90	2.15	2.15	2.15	2.15	9.50 (3.00-11.00)	2.51 (0.30-3.46)	3.78	9.5	6.5	A++
	7	7	7	7	7	1.90	1.90	1.90	1.90	1.90	9.50 (3.0-11.0)	2.50 (0.30-3.45)	3.80	9.5	8.5	A+++
	7	7	7	7	9	1.80	1.80	1.80	1.80	2.30	9.50 (3.0-11.0)	2.50 (0.30-3.45)	3.80	9.5	8.5	A+++
	7	7	7	7	12	1.66	1.66	1.66	1.66	2.86	9.50 (3.0-11.0)	2.50 (0.30-3.45)	3.80	9.5	8.5	A+++
	7	7	7	7	14	1.58	1.58	1.58	1.58	3.18	9.50 (3.0-11.0)	2.50 (0.30-3.45)	3.80	9.5	8.5	A+++
	7	7	7	7	18	1.45	1.45	1.45	1.45	3.70	9.50 (3.0-11.0)	2.50 (0.30-3.45)	3.80	9.5	8.5	A+++
	7	7	7	7	22*1	1.33	1.33	1.33	1.33	4.18	9.50 (3.0-11.0)	2.50 (0.30-3.45)	3.80	9.5	8.5	A+++
	7	7	7	7	24	1.28	1.28	1.28	1.28	4.38	9.50 (3.0-11.0)	2.50 (0.30-3.45)	3.80	9.5	8.5	A+++
	7	7	7	9	9	1.70	1.70	1.70	2.20	2.20	9.50 (3.0-11.0)	2.50 (0.30-3.45)	3.80	9.5	8.5	A+++
	7	7	7	9	12	1.58	1.58	1.58	2.04	2.72	9.50 (3.0-11.0)	2.50 (0.30-3.45)	3.80	9.5	8.5	A+++
	7	7	7	9	14	1.51	1.51	1.51	1.94	3.03	9.50 (3.0-11.0)	2.50 (0.30-3.45)	3.80	9.5	8.5	A+++
	7	7	7	9	18	1.39	1.39	1.39	1.77	3.56

5-unit Multi-split Combination Table–Heating

The data in the table below shows the performance of various combinations of indoor and outdoor units of different capacities, using the most efficient type of indoor unit.
These values should not be interpreted as official declarations for tax incentives or other certifications.
For more information on specific types of indoor and outdoor unit combinations, please refer to the Design & Technical Manual.

REFRIGERANT R32

5-unit Multi-split heating

AOEG36KBTA5	Combination of Indoor Units					Heating Operation										
						Heating Capacity						Input Power (Min. - Max.)	COP	Seasonal Data		
						Unit 1	Unit 2	Unit 3	Unit 4	Unit 5	Total Capacity (Min. - Max.)			Pdesign	SCOP	Energy efficiency
						kW	kW	kW	kW	kW	kW	kW		kW		
2-unit connection	5	22	-	-	-	1.67	7.33	-	-	-	9.00 (3.50-10.80)	2.28 (0.25-2.84)	3.94	6.0	4.1	A++
	5	24	-	-	-	1.66	7.94	-	-	-	9.60 (3.50-11.60)	2.41 (0.25-3.12)	3.98	6.8	4.0	A+
	7	24	-	-	-	2.39	8.21	-	-	-	10.60 (3.5-12.0)	2.65 (0.25-3.25)	4.00	7.0	4.3	A+
	9	22	-	-	-	3.00	7.20	-	-	-	10.20 (3.5-12.0)	2.52 (0.25-3.25)	4.04	6.8	4.3	A+
	9	24	-	-	-	2.89	7.71	-	-	-	10.60 (3.5-12.0)	2.65 (0.25-3.25)	4.00	7.0	4.3	A+
	12	22	-	-	-	3.74	6.86	-	-	-	10.60 (3.5-12.0)	2.65 (0.25-3.25)	4.00	7.0	4.3	A+
	12	24	-	-	-	3.53	7.07	-	-	-	10.60 (3.5-12.0)	2.65 (0.25-3.25)	4.00	7.0	4.3	A+
	14	22	-	-	-	4.12	6.48	-	-	-	10.60 (3.5-12.0)	2.65 (0.25-3.25)	4.00	7.0	4.3	A+
	14	24	-	-	-	3.91	6.69	-	-	-	10.60 (3.5-12.0)	2.65 (0.25-3.25)	4.00	7.0	4.3	A+
	18	18	-	-	-	5.30	5.30	-	-	-	10.60 (3.5-12.0)	2.65 (0.25-3.25)	4.00	7.0	4.3	A+
	18	22	-	-	-	4.77	5.83	-	-	-	10.60 (3.5-12.0)	2.65 (0.25-3.25)	4.00	7.0	4.3	A+
	18	24	-	-	-	4.54	6.06	-	-	-	10.60 (3.5-12.0)	2.65 (0.25-3.25)	4.00	7.0	4.3	A+
	22	22	-	-	-	5.30	5.30	-	-	-	10.60 (3.5-12.0)	2.65 (0.25-3.25)	4.00	7.0	4.3	A+
	22	24	-	-	-	5.07	5.53	-	-	-	10.60 (3.5-12.0)	2.65 (0.25-3.25)	4.00	7.0	4.3	A+
	24	24	-	-	-	5.30	5.30	-	-	-	10.60 (3.5-12.0)	2.65 (0.25-3.25)	4.00	7.0	4.3	A+
3-unit connection	5	5	18	-	-	1.71	1.71	6.17	-	-	9.60 (3.50-10.90)	2.34 (0.25-2.96)	4.10	6.5	4.2	A++
	5	5	22	-	-	1.66	1.66	7.29	-	-	10.60 (3.50-12.00)	2.55 (0.25-3.26)	4.16	7.0	4.1	A++
	5	5	24	-	-	1.56	1.56	7.48	-	-	10.60 (3.50-12.00)	2.55 (0.25-3.26)	4.16	7.0	4.1	A++
	5	7	18	-	-	1.70	2.38	6.12	-	-	10.20 (3.50-11.60)	2.43 (0.25-3.26)	4.19	6.8	4.1	A++
	5	7	22	-	-	1.56	2.18	6.86	-	-	10.60 (3.50-12.00)	2.55 (0.25-3.26)	4.16	7.0	4.1	A++
	5	7	24	-	-	1.47	2.06	7.07	-	-	10.60 (3.50-12.00)	2.55 (0.25-3.26)	4.16	7.0	4.1	A++
	5	9	14	-	-	1.71	3.09	4.80	-	-	9.60 (3.50-11.20)	2.34 (0.25-2.96)	4.10	6.5	4.2	A++
	5	9	18	-	-	1.66	2.98	5.96	-	-	10.60 (3.50-12.00)	2.55 (0.25-3.26)	4.16	7.0	4.1	A++
	5	9	22	-	-	1.47	2.65	6.48	-	-	10.60 (3.50-12.00)	2.55 (0.25-3.26)	4.16	7.0	4.1	A++
	5	9	24	-	-	1.39	2.51	6.69	-	-	10.60 (3.50-12.00)	2.55 (0.25-3.26)	4.16	7.0	4.1	A++
	5	12	12	-	-	1.71	4.10	4.10	-	-	9.90 (3.50-11.60)	2.41 (0.25-3.12)	4.11	6.8	4.1	A++
	5	12	14	-	-	1.71	4.10	4.79	-	-	10.60 (3.50-12.00)	2.55 (0.25-3.26)	4.16	7.0	4.1	A++
	5	12	18	-	-	1.51	3.63	5.45	-	-	10.60 (3.50-12.00)	2.55 (0.25-3.26)	4.16	7.0	4.1	A++
	5	12	22	-	-	1.36	3.26	5.98	-	-	10.60 (3.50-12.00)	2.55 (0.25-3.26)	4.16	7.0	4.1	A++
	5	12	24	-	-	1.29	3.10	6.20	-	-	10.60 (3.50-12.00)	2.55 (0.25-3.26)	4.16	7.0	4.1	A++
	5	14	14	-	-	1.61	4.50	4.50	-	-	10.60 (3.50-12.00)	2.55 (0.25-3.26)	4.16	7.0	4.1	A++
	5	14	18	-	-	1.43	4.01	5.16	-	-	10.60 (3.50-12.00)	2.55 (0.25-3.26)	4.16	7.0	4.1	A++
	5	14	22	-	-	1.29	3.62	5.69	-	-	10.60 (3.50-12.00)	2.55 (0.25-3.26)	4.16	7.0	4.1	A++
	5	14	24	-	-	1.23	3.45	5.92	-	-	10.60 (3.50-12.00)	2.55 (0.25-3.26)	4.16	7.0	4.1	A++
	5	18	18	-	-	1.29	4.65	4.65	-	-	10.60 (3.50-12.00)	2.55 (0.25-3.26)	4.16	7.0	4.1	A++
	5	18	22	-	-	1.18	4.24	5.18	-	-	10.60 (3.50-12.00)	2.55 (0.25-3.26)	4.16	7.0	4.1	A++
	5	18	24	-	-	1.13	4.06	5.41	-	-	10.60 (3.50-12.00)	2.55 (0.25-3.26)	4.16	7.0	4.1	A++
	5	22	22	-	-	1.08	4.76	4.76	-	-	10.60 (3.50-12.00)	2.55 (0.25-3.26)	4.16	7.0	4.1	A++
	5	22	24	-	-	1.04	4.57	4.99	-	-	10.60 (3.50-12.00)	2.55 (0.25-3.26)	4.16	7.0	4.1	A++
	5	24	24	-	-	1.00	4.80	4.80	-	-	10.60 (3.50-12.00)	2.55 (0.25-3.26)	4.16	7.0	4.1	A++
	7	7	14	-	-	2.40	2.40	4.80	-	-	9.60 (3.5-11.2)	2.25 (0.25-2.87)	4.26	6.5	4.5	A+
	7	7	18	-	-	2.32	2.32	5.96	-	-	10.60 (3.5-12.0)	2.54 (0.25-3.25)	4.18	7.0	4.4	A+
	7	7	22	-	-	2.06	2.06	6.48	-	-	10.60 (3.5-12.0)	2.54 (0.25-3.25)	4.18	7.0	4.4	A+
	7	7	24	-	-	1.95	1.95	6.70	-	-	10.60 (3.5-12.0)	2.54 (0.25-3.25)	4.18	7.0	4.4	A+
	7	9	12	-	-	2.40	3.00	4.20	-	-	9.60 (3.5-11.2)	2.25 (0.25-2.87)	4.26	6.5	4.5	A+
	7	9	14	-	-	2.40	3.00	4.80	-	-	10.20 (3.5-12.0)	2.42 (0.25-3.25)	4.21	6.8	4.4	A+
	7	9	18	-	-	2.18	2.81	5.61	-	-	10.60 (3.5-12.0)	2.54 (0.25-3.25)	4.18	7.0	4.4	A+
	7	9	22	-	-	1.95	2.51	6.14	-	-	10.60 (3.5-12.0)	2.54 (0.25-3.25)	4.18	7.0	4.4	A+
	7	9	24	-	-	1.85	2.39	6.36	-	-	10.60 (3.5-12.0)	2.54 (0.25-3.25)	4.18	7.0	4.4	A+
	7	12	12	-	-	2.40	4.10	4.10	-	-	10.60 (3.5-12.0)	2.54 (0.25-3.25)	4.18	7.0	4.4	A+
	7	12	14	-	-	2.25	3.85	4.50	-	-	10.60 (3.5-12.0)	2.54 (0.25-3.25)	4.18	7.0	4.4	A+
	7	12	18	-	-	2.00	3.44	5.16	-	-	10.60 (3.5-12.0)	2.54 (0.25-3.25)	4.18	7.0	4.4	A+
	7	12	22	-	-	1.81	3.10	5.69	-	-	10.60 (3.5-12.0)	2.54 (0.25-3.25)	4.18	7.0	4.4	A+
	7	12	24	-	-	1.72	2.96	5.92	-	-	10.60 (3.5-12.0)	2.54 (0.25-3.25)	4.18	7.0	4.4	A+
	7	14	14	-	-	2.12	4.24	4.24	-	-	10.60 (3.5-12.0)	2.54 (0.25-3.25)	4.18	7.0	4.4	A+
	7	14	18	-	-	1.90	3.81	4.89	-	-	10.60 (3.5-12.0)	2.54 (0.25-3.25)	4.18	7.0	4.4	A+
	7	14	22	-	-	1.73	3.45	5.42	-	-	10.60 (3.5-12.0)	2.54 (0.25-3.25)	4.18	7.0	4.4	A+
	7	14	24	-	-	1.65	3.30	5.65	-	-	10.60 (3.5-12.0)	2.54 (0.25-3.25)	4.18	7.0	4.4	A+
	7	18	18	-	-	1.72	4.44	4.44	-	-	10.60 (3.5-12.0)	2.54 (0.25-3.25)	4.18	7.0	4.4	A+
	7	18	22	-	-	1.58	4.06	4.96	-	-	10.60 (3.5-12.0)	2.54 (0.25-3.25)	4.18	7.0	4.4	A+
	7	18	24	-	-	1.51	3.89	5.20	-	-	10.60 (3.5-12.0)	2.54 (0.25-3.25)	4.18	7.0	4.4	A+
	9	9	9	-	-	3.00	3.00	3.00	-	-	9.00 (3.5-10.8)	2.09 (0.25-2.70)	4.31	6.0	4.5	A+
	9	9	12	-	-	3.00	3.00	4.20	-	-	10.20 (3.5-12.0)	2.42 (0.25-3.25)	4.21	6.8	4.4	A+
	9	9	14	-	-	2.98	2.98	4.64	-	-	10.60 (3.5-12.0)	2.54 (0.25-3.25)	4.18	7.0	4.4	A+
	9	9	18	-	-	2.65	2.65	5.30	-	-	10.60 (3.5-12.0)	2.54 (0.25-3.25)	4.18	7.0	4.4	A+
	9	9	22	-	-	2.39	2.39	5.82	-	-	10.60 (3.5-12.0)	2.54 (0.25-3.25)	4.18	7.0	4.4	A+
	9	9	24	-	-	2.27	2.27	6.06	-	-	10.60 (3.5-12.0)	2.54 (0.25-3.25)	4.18	7.0	4.4	A+
	9	12	12	-	-	2.90	3.85	3.85	-	-	10.60 (3.5-12.0)	2.54 (0.25-3.25)	4.18	7.0	4.4	A+
	9	12	14	-	-	2.73	3.63	4.24	-	-	10.60 (3.5-12.0)	2.54 (0.25-3.25)	4.18	7.0	4.4	A+
	9	12	18	-	-	2.45	3.26	4.89	-	-	10.60 (3.5-12.0)	2.54 (0.25-3.25)	4.18	7.0	4.4	A+
	9	12	22	-	-	2.22	2.96	5.42	-	-	10.60 (3.5-12.0)	2.54 (0.25-3.25)	4.18	7.0	4.4	A+
	9	12	24	-	-	2.12	2.83	5.65	-	-	10.60 (3.5-12.0)	2.54 (0.25-3.25)	4.18	7.0	4.4	A+
	9	14	14	-	-	2.58	4.01	4.01	-	-	10.60 (3.5-12.0)	2.54 (0.25-3.25)	4.18	7.0	4.4	A+
	9	14	18	-	-	2.33	3.62	4.65	-	-	10.60 (3.5-12.0)	2.54 (0.25-3.25)	4.18	7.0	4.4	A+
	9	14	22	-	-	2.12	3.30	5.18	-	-	10.60 (3.5-12.0)	2.54 (0.25-3.25)	4.18	7.0	4.4	A+
	9	14	24	-	-	2.03	3.16	5.41	-	-	10.60 (3.5-12.0)	2.54 (0.25-3.25)	4.18	7.0	4.4	A+
	9	18	18	-	-	2.12	4.24	4.24	-	-	10.60 (3.5-12.0)	2.54 (0.25-3.25)	4.18	7.0	4.4	A+
	9	18	22	-	-	1.95	3.89	4.76	-	-	10.60 (3.5-12.0)	2.54 (0.25-3.25)	4.18	7.0	4.4	A+
	9	18	24	-	-	1.87	3.74	4.99	-	-	10.60 (3.5-12.0)	2.54 (0.25-3.25)	4.18	7.0	4.4	A+
	12	12	12	-	-	3.53	3.53	3.53	-	-	10.60 (3.5-12.0)	2.54 (0.25-3.25)	4.18	7.0	4.4	A+
	12	12	14	-	-	3.35	3.35	3.90	-	-	10.60 (3.5-12.0)	2.54 (0.25-3.25)	4.18	7.0	4.4	A+
	12	12	18	-	-	3.03	3.03	4.54	-	-	10.60 (3.5-12.0)	2.54 (0.25-3.25)	4.18	7.0	4.4	A+
	12	12	22	-	-	2.77	2.77	5.06	-	-	10.60 (3.5-12.0)	2.54 (0.25-3.25)	4.18	7.0	4.4	A+
	12	12	24	-	-	2.65	2.65	5.30	-	-	10.60 (3.5-12.0)	2.54 (0.25-3.25)	4.18	7.0	4.4	A+
	12	14	14	-	-	3.18	3.71	3.71	-	-	10.60 (3.5-12.0)	2.54 (0.25-3.25)	4.18	7.0	4.4	A+
	12	14	18	-	-	2.89	3.37	4.34	-	-	10.60 (3.5-12.0)	2.54 (0.25-3.25)	4.18	7.0	4.4	A+
	12	14	22	-	-	2.65	3.09	4.86	-	-	10.60 (3.5-12.0)	2.54 (0.25-3.25)	4.18	7.0	4.4	A+
	12	14	24	-	-	2.54	2.97	5.09	-	-	10.60 (3.5-12.0)	2.54 (0.25-3.25)	4.18	7.0	4.4	A+
	12	18	18	-	-	2.64	3.98	3.98	-	-	10.60 (3.5-12.0)	2.54 (0.25-3.25)	4.18	7.0	4.4	A+
	12	18	22	-	-	2.45	3.67	4.48	-	-	10.60 (3.5-12.0)	2.54 (0.25-3.25)	4.18	7.0	4.4	A+
	12	18	24	-	-	2.36	3.53	4.71	-	-	10.60 (3.5-12.0)	2.54 (0.25-3.25)	4.18	7.0	4.4	A+
	14	14	14	-	-	3.53	3.53	3.53	-	-	10.60 (3.5-12.0)	2.54 (0.25-3.25)	4.18	7.0	4.4	A+
	14	14	18	-	-	3.23	3.23	4.14	-	-	10.60 (3.5-12.0)	2.54 (0.25-3.25)	4.18	7.0	4.4	A+
	14	14	22	-	-	2.97	2.97	4.66	-	-	10.60 (3.5-12.0)	2.54 (0.25-3.25)	4.18	7.0	4.4	A+
	14	14	24	-	-	2.85	2.85	4.90	-	-	10.60 (3.5-12.0)	2.54 (0.25-3.25)	4.18	7.0	4.4	A+
	14	18	18	-	-	2.96	3.82	3.82	-	-	10.60 (3.5-12.0)	2.54 (0.25-3.25)	4.18	7.0	4.4	A+
	18	18	18	-	-	3.53	3.53	3.53	-	-	10.60 (3.5-12.0)	2.54 (0.25-3.25)	4.18	7.0	4.4	A+
4-unit connection	5	5	5	12	-	1.67	1.67	1.67	4.00	-	9.00 (3.50-10.80)	2.21 (0.25-2.84)	4.07	6.5	4.3	A++
	5	5	5	14	-	1.66	1.66	1.66	4.63	-	9.60 (3.50-11.60)	2.31 (0.25-3.12)	4.16	6.8	4.2	A++
	5	5	5	18	-	1.61	1.61	1.61	5.78	-	10.60 (3.50-12.00)	2.45 (0.25-3.26)	4.32	7.0	4.2	A++
	5	5	5	22	-	1.43	1.43	1.43	6.30	-	10.60 (3.50-12.00)	2.45 (0.25-3.26)	4.32	7.0	4.2	A++
	5	5	5	24	-	1.36	1.36	1.36	6.52	-	10.60 (3.50-12.00)	2.45 (0.25-3.26)	4.32	7.0	4.2	A++
	5	5	7	12	-	1.66	1.66	2.32	3.97	-	9.60 (3.50-11.60)	2.31 (0.25-3.12)	4.16	6.8	4.2	A++
	5	5	7	14	-	1.71	1.71	2.39	4.79	-	10.60 (3.50-12.00)	2.40 (0.25-3.26)	4.41	7.0	4.2	A++
	5	5	7	18	-	1.51	1.51	2.12	5.45	-	10.60 (3.50-12.00)	2.45 (0.25-3.26)	4.32	7.0	4.2	A++
	5	5	7	22	-	1.36	1.36	1.90	5.98	-	10.60 (3.50-12.00)	2.45 (0.25-3.26)	4.32	7.0	4.2	A++
	5	5	7	24	-	1.29	1.29	1.81	6.20	-	10.60 (3.50-12.00)	2.45 (0.25-3.26)	4.32	7.0	4.2	A++
	5	5	9	9	-	1.71	1.71	3.09	3.09	-	9.60 (3.50-11.20)	2.26 (0.25-2.96)	4.25	6.5	4.3	A++
	5	5	9	12	-	1.71	1.71	3.08	4.10	-	10.60 (3.50-12.00)	2.40 (0.25-3.26)	4.41	7.0	4.2	A++
	5	5	9	14	-	1.61	1.61	2.89	4.50	-	10.60 (3.50-12.00)	2.45 (0.25-3.26)	4.32	7.0	4.2	A++
	5	5	9	18	-	1.43	1.43	2.58	5.16	-	10.60 (3.50-12.00)	2.45 (0.25-3.26)	4.32	7.0	4.2	A++
	5	5	9	22	-	1.29	1.29	2.33	5.69	-	10.60 (3.50-12.00)	2.45 (0.25-3.26)	4.32	7.0	4.2	A++
	5	5	9	24	-	1.23	1.23	2.22	5.92	-	10.60 (3.50-12.00)	2.45 (0.25-3.26)	4.32	7.0	4.2	A++
	5	5	12	12	-	1.56	1.56	3.74	3.74	-	10.60 (3.50-12.00)	2.45 (0.25-3.26)	4.32	7.0	4.2	A++
	5	5	12	14	-	1.47	1.47	3.53	4.12	-	10.60 (3.50-12.00)	2.45 (0.25-3.26)	4.32	7.0	4.2	A++

5-unit Multi-split heating

AOEG36KBTA5	Combination of Indoor Units					Heating Operation										
						Heating Capacity						Input Power (Min. - Max.)	COP	Seasonal Data		
						Unit 1	Unit 2	Unit 3	Unit 4	Unit 5	Total Capacity (Min. - Max.)			Pdesign	SCOP	Energy efficiency
						kW	kW	kW	kW	kW	kW	kW		kW		
4-unit connection	5	5	12	18	-	1.33	1.33	3.18	4.77	-	10.60 (3.50-12.00)	2.45 (0.25-3.26)	4.32	7.0	4.2	A++
	5	5	12	22	-	1.20	1.20	2.89	5.30	-	10.60 (3.50-12.00)	2.45 (0.25-3.26)	4.32	7.0	4.2	A++
	5	5	12	24	-	1.15	1.15	2.77	5.53	-	10.60 (3.50-12.00)	2.45 (0.25-3.26)	4.32	7.0	4.2	A++
	5	5	14	14	-	1.39	1.39	3.91	3.91	-	10.60 (3.50-12.00)	2.45 (0.25-3.26)	4.32	7.0	4.2	A++
	5	5	14	18	-	1.26	1.26	3.53	4.54	-	10.60 (3.50-12.00)	2.45 (0.25-3.26)	4.32	7.0	4.2	A++
	5	5	14	22	-	1.15	1.15	3.23	5.07	-	10.60 (3.50-12.00)	2.45 (0.25-3.26)	4.32	7.0	4.2	A++
	5	5	14	24	-	1.10	1.10	3.09	5.30	-	10.60 (3.50-12.00)	2.45 (0.25-3.26)	4.32	7.0	4.2	A++
	5	5	18	18	-	1.15	1.15	4.15	4.15	-	10.60 (3.50-12.00)	2.45 (0.25-3.26)	4.32	7.0	4.2	A++
	5	5	18	22	-	1.06	1.06	3.82	4.66	-	10.60 (3.50-12.00)	2.45 (0.25-3.26)	4.32	7.0	4.2	A++
	5	5	18	24	-	1.02	1.02	3.67	4.89	-	10.60 (3.50-12.00)	2.45 (0.25-3.26)	4.32	7.0	4.2	A++
	5	7	7	9	-	1.71	2.40	2.40	3.09	-	9.60 (3.50-11.20)	2.26 (0.25-2.96)	4.25	7.0	4.2	A++
	5	7	7	12	-	1.71	2.39	2.39	4.10	-	10.60 (3.50-12.00)	2.40 (0.25-3.26)	4.41	7.0	4.2	A++
	5	7	7	14	-	1.61	2.25	2.25	4.50	-	10.60 (3.50-12.00)	2.45 (0.25-3.26)	4.32	7.0	4.2	A++
	5	7	7	18	-	1.43	2.01	2.01	5.16	-	10.60 (3.50-12.00)	2.45 (0.25-3.26)	4.32	7.0	4.2	A++
	5	7	7	22	-	1.29	1.81	1.81	5.69	-	10.60 (3.50-12.00)	2.45 (0.25-3.26)	4.32	7.0	4.2	A++
	5	7	7	24	-	1.23	1.73	1.73	5.92	-	10.60 (3.50-12.00)	2.45 (0.25-3.26)	4.32	6.8	4.2	A++
	5	7	9	9	-	1.70	2.38	3.06	3.06	-	10.20 (3.50-12.00)	2.34 (0.25-3.26)	4.35	7.0	4.2	A++
	5	7	9	12	-	1.61	2.25	2.89	3.85	-	10.60 (3.50-12.00)	2.45 (0.25-3.26)	4.32	7.0	4.2	A++
	5	7	9	14	-	1.51	2.12	2.73	4.24	-	10.60 (3.50-12.00)	2.45 (0.25-3.26)	4.32	7.0	4.2	A++
	5	7	9	18	-	1.36	1.90	2.45	4.89	-	10.60 (3.50-12.00)	2.45 (0.25-3.26)	4.32	7.0	4.2	A++
	5	7	9	22	-	1.23	1.73	2.22	5.42	-	10.60 (3.50-12.00)	2.45 (0.25-3.26)	4.32	7.0	4.2	A++
	5	7	9	24	-	1.18	1.65	2.12	5.65	-	10.60 (3.50-12.00)	2.45 (0.25-3.26)	4.32	7.0	4.2	A++
	5	7	12	12	-	1.47	2.06	3.53	3.53	-	10.60 (3.50-12.00)	2.45 (0.25-3.26)	4.32	7.0	4.2	A++
	5	7	12	14	-	1.39	1.95	3.35	3.91	-	10.60 (3.50-12.00)	2.45 (0.25-3.26)	4.32	7.0	4.2	A++
	5	7	12	18	-	1.26	1.77	3.03	4.54	-	10.60 (3.50-12.00)	2.45 (0.25-3.26)	4.32	7.0	4.2	A++
	5	7	12	22	-	1.15	1.61	2.77	5.07	-	10.60 (3.50-12.00)	2.45 (0.25-3.26)	4.32	7.0	4.2	A++
	5	7	12	24	-	1.10	1.55	2.65	5.30	-	10.60 (3.50-12.00)	2.45 (0.25-3.26)	4.32	7.0	4.2	A++
	5	7	14	14	-	1.33	1.86	3.71	3.71	-	10.60 (3.50-12.00)	2.45 (0.25-3.26)	4.32	7.0	4.2	A++
	5	7	14	18	-	1.20	1.69	3.37	4.34	-	10.60 (3.50-12.00)	2.45 (0.25-3.26)	4.32	7.0	4.2	A++
	5	7	14	22	-	1.10	1.55	3.09	4.86	-	10.60 (3.50-12.00)	2.45 (0.25-3.26)	4.32	7.0	4.2	A++
	5	7	14	24	-	1.06	1.48	2.97	5.09	-	10.60 (3.50-12.00)	2.45 (0.25-3.26)	4.32	7.0	4.2	A++
	5	7	18	18	-	1.10	1.55	3.98	3.98	-	10.60 (3.50-12.00)	2.45 (0.25-3.26)	4.32	7.0	4.2	A++
	5	7	18	22	-	1.02	1.43	3.67	4.48	-	10.60 (3.50-12.00)	2.45 (0.25-3.26)	4.32	7.0	4.2	A++
	5	7	18	24	-	0.98	1.37	3.53	4.71	-	10.60 (3.50-12.00)	2.45 (0.25-3.26)	4.32	7.0	4.2	A++
	5	9	9	9	-	1.66	2.98	2.98	2.98	-	10.60 (3.50-12.00)	2.45 (0.25-3.26)	4.32	7.0	4.2	A++
	5	9	9	12	-	1.51	2.73	2.73	3.63	-	10.60 (3.50-12.00)	2.45 (0.25-3.26)	4.32	7.0	4.2	A++
	5	9	9	14	-	1.43	2.58	2.58	4.01	-	10.60 (3.50-12.00)	2.45 (0.25-3.26)	4.32	7.0	4.2	A++
	5	9	9	18	-	1.29	2.33	2.33	4.65	-	10.60 (3.50-12.00)	2.45 (0.25-3.26)	4.32	7.0	4.2	A++
	5	9	9	22	-	1.18	2.12	2.12	5.18	-	10.60 (3.50-12.00)	2.45 (0.25-3.26)	4.32	7.0	4.2	A++
	5	9	9	24	-	1.13	2.03	2.03	5.41	-	10.60 (3.50-12.00)	2.45 (0.25-3.26)	4.32	7.0	4.2	A++
	5	9	12	12	-	1.39	2.51	3.35	3.35	-	10.60 (3.50-12.00)	2.45 (0.25-3.26)	4.32	7.0	4.2	A++
	5	9	12	14	-	1.33	2.39	3.18	3.71	-	10.60 (3.50-12.00)	2.45 (0.25-3.26)	4.32	7.0	4.2	A++
	5	9	12	18	-	1.20	2.17	2.89	4.34	-	10.60 (3.50-12.00)	2.45 (0.25-3.26)	4.32	7.0	4.2	A++
	5	9	12	22	-	1.10	1.99	2.65	4.86	-	10.60 (3.50-12.00)	2.45 (0.25-3.26)	4.32	7.0	4.2	A++
	5	9	12	24	-	1.06	1.91	2.54	5.09	-	10.60 (3.50-12.00)	2.45 (0.25-3.26)	4.32	7.0	4.2	A++
	5	9	14	14	-	1.26	2.27	3.53	3.53	-	10.60 (3.50-12.00)	2.45 (0.25-3.26)	4.32	7.0	4.2	A++
	5	9

5-unit Multi-split Combination Table–Heating

The data in the table below shows the performance of various combinations of indoor and outdoor units of different capacities, using the most efficient type of indoor unit.
These values should not be interpreted as official declarations for tax incentives or other certifications.
For more information on specific types of indoor and outdoor unit combinations, please refer to the Design & Technical Manual.

5-unit Multi-split heating

AOEG36KBTA5	Combination of Indoor Units					Heating Operation										
						Heating Capacity						Input Power (Min. - Max.)	COP	Seasonal Data		
						Unit 1	Unit 2	Unit 3	Unit 4	Unit 5	Total Capacity (Min. - Max.)			Pdesign	SCOP	Energy efficiency
						kW	kW	kW	kW	kW	kW	kW		kW		
4-unit connection	9	9	12	14	-	2.17	2.17	2.89	3.37	-	10.60 (3.5-12.0)	2.44 (0.25-3.25)	4.34	7.0	4.5	A+
	9	9	12	18	-	1.99	1.99	2.64	3.98	-	10.60 (3.5-12.0)	2.44 (0.25-3.25)	4.34	7.0	4.5	A+
	9	9	12	22	-	1.83	1.83	2.45	4.49	-	10.60 (3.5-12.0)	2.44 (0.25-3.25)	4.34	7.0	4.5	A+
	9	9	12	24	-	1.77	1.77	2.35	4.71	-	10.60 (3.5-12.0)	2.44 (0.25-3.25)	4.34	7.0	4.5	A+
	9	9	14	14	-	2.07	2.07	3.23	3.23	-	10.60 (3.5-12.0)	2.44 (0.25-3.25)	4.34	7.0	4.5	A+
	9	9	14	18	-	1.91	1.91	2.96	3.82	-	10.60 (3.5-12.0)	2.44 (0.25-3.25)	4.34	7.0	4.5	A+
	9	9	18	18	-	1.77	1.77	3.53	3.53	-	10.60 (3.5-12.0)	2.44 (0.25-3.25)	4.34	7.0	4.5	A+
	9	12	12	12	-	2.11	2.83	2.83	2.83	-	10.60 (3.5-12.0)	2.44 (0.25-3.25)	4.34	7.0	4.5	A+
	9	12	12	14	-	2.02	2.71	2.71	3.16	-	10.60 (3.5-12.0)	2.44 (0.25-3.25)	4.34	7.0	4.5	A+
	9	12	12	18	-	1.87	2.49	2.49	3.75	-	10.60 (3.5-12.0)	2.44 (0.25-3.25)	4.34	7.0	4.5	A+
	9	12	14	14	-	1.94	2.60	3.03	3.03	-	10.60 (3.5-12.0)	2.44 (0.25-3.25)	4.34	7.0	4.5	A+
	9	12	14	18	-	1.80	2.40	2.80	3.60	-	10.60 (3.5-12.0)	2.44 (0.25-3.25)	4.34	7.0	4.5	A+
	9	14	14	14	-	1.87	2.91	2.91	2.91	-	10.60 (3.5-12.0)	2.44 (0.25-3.25)	4.34	7.0	4.5	A+
	12	12	12	12	-	2.65	2.65	2.65	2.65	-	10.60 (3.5-12.0)	2.44 (0.25-3.25)	4.34	7.0	4.5	A+
	12	12	12	14	-	2.54	2.54	2.54	2.98	-	10.60 (3.5-12.0)	2.44 (0.25-3.25)	4.34	7.0	4.5	A+
	12	12	12	18	-	2.36	2.36	2.36	3.52	-	10.60 (3.5-12.0)	2.44 (0.25-3.25)	4.34	7.0	4.5	A+
	12	12	14	14	-	2.45	2.45	2.85	2.85	-	10.60 (3.5-12.0)	2.44 (0.25-3.25)	4.34	7.0	4.5	A+
	12	14	14	14	-	2.35	2.75	2.75	2.75	-	10.60 (3.5-12.0)	2.44 (0.25-3.25)	4.34	7.0	4.5	A+
	5	5	5	5	7	1.39	1.39	1.39	1.39	1.94	7.50 (3.50-10.80)	1.98 (0.25-2.84)	3.78	6.8	4.3	A++
	5	5	5	5	9	1.38	1.38	1.38	1.38	2.48	8.00 (3.50-11.60)	2.08 (0.25-3.12)	3.85	7.0	4.3	A++
	5	5	5	5	12	1.41	1.41	1.41	1.41	3.38	9.00 (3.50-12.00)	2.37 (0.25-3.26)	3.80	7.0	4.3	A++
	5	5	5	5	14	1.40	1.40	1.40	1.40	3.91	9.50 (3.50-12.00)	2.37 (0.25-3.26)	4.01	7.0	4.3	A++
	5	5	5	5	18	1.25	1.25	1.25	1.25	4.50	9.50 (3.50-12.00)	2.37 (0.25-3.26)	4.01	7.0	4.3	A++
	5	5	5	5	22	1.13	1.13	1.13	1.13	4.98	9.50 (3.50-12.00)	2.37 (0.25-3.26)	4.01	7.0	4.3	A++
	5	5	5	5	24	1.08	1.08	1.08	1.08	5.18	9.50 (3.50-12.00)	2.37 (0.25-3.26)	4.01	6.8	4.3	A++
	5	5	5	7	7	1.38	1.38	1.38	1.93	1.93	8.00 (3.50-11.60)	2.08 (0.25-3.12)	3.85	7.0	4.3	A++
	5	5	5	7	9	1.45	1.45	1.45	2.03	2.61	9.00 (3.50-12.00)	2.18 (0.25-3.26)	4.14	7.0	4.3	A++
	5	5	5	7	12	1.40	1.40	1.40	1.96	3.35	9.50 (3.50-12.00)	2.37 (0.25-3.26)	4.01	7.0	4.3	A++
	5	5	5	7	14	1.32	1.32	1.32	1.85	3.69	9.50 (3.50-12.00)	2.37 (0.25-3.26)	4.01	7.0	4.3	A++
	5	5	5	7	18	1.19	1.19	1.19	1.66	4.28	9.50 (3.50-12.00)	2.37 (0.25-3.26)	4.01	7.0	4.3	A++
	5	5	5	7	22	1.08	1.08	1.08	1.51	4.75	9.50 (3.50-12.00)	2.37 (0.25-3.26)	4.01	7.0	4.3	A++
	5	5	5	7	24	1.03	1.03	1.03	1.45	4.96	9.50 (3.50-12.00)	2.37 (0.25-3.26)	4.01	7.0	4.3	A++
	5	5	5	9	9	1.44	1.44	1.44	2.59	2.59	9.50 (3.50-12.00)	2.37 (0.25-3.26)	4.01	7.0	4.3	A++
	5	5	5	9	12	1.32	1.32	1.32	2.38	3.17	9.50 (3.50-12.00)	2.37 (0.25-3.26)	4.01	7.0	4.3	A++
	5	5	5	9	14	1.25	1.25	1.25	2.25	3.50	9.50 (3.50-12.00)	2.37 (0.25-3.26)	4.01	7.0	4.3	A++
	5	5	5	9	18	1.13	1.13	1.13	2.04	4.07	9.50 (3.50-12.00)	2.37 (0.25-3.26)	4.01	7.0	4.3	A++
	5	5	5	9	22	1.03	1.03	1.03	1.86	4.54	9.50 (3.50-12.00)	2.37 (0.25-3.26)	4.01	7.0	4.3	A++
	5	5	5	9	24	0.99	0.99	0.99	1.78	4.75	9.50 (3.50-12.00)	2.37 (0.25-3.26)	4.01	7.0	4.3	A++
	5	5	5	12	12	1.22	1.22	1.22	2.92	2.92	9.50 (3.50-12.00)	2.37 (0.25-3.26)	4.01	7.0	4.3	A++
	5	5	5	12	14	1.16	1.16	1.16	2.78	3.24	9.50 (3.50-12.00)	2.37 (0.25-3.26)	4.01	7.0	4.3	A++
	5	5	5	12	18	1.06	1.06	1.06	2.53	3.80	9.50 (3.50-12.00)	2.37 (0.25-3.26)	4.01	7.0	4.3	A++
	5	5	5	12	22	0.97	0.97	0.97	2.33	4.27	9.50 (3.50-12.00)	2.37 (0.25-3.26)	4.01	7.0	4.3	A++
	5	5	5	12	24	0.93	0.93	0.93	2.24	4.47	9.50 (3.50-12.00)	2.37 (0.25-3.26)	4.01	7.0	4.3	A++
	5	5	5	14	14	1.10	1.10	1.10	3.09	3.09	9.50 (3.50-12.00)	2.37 (0.25-3.26)	4.01	7.0	4.3	A++
	5	5	5	14	18	1.01	1.01	1.01	2.83	3.64	9.50 (3.50-12.00)	2.37 (0.25-3.26)	4.01	7.0	4.3	A++
	5	5	5	14	22	0.93	0.93	0.93	2.61	4.10	9.50 (3.50-12.00)	2.37 (0.25-3.26)	4.01	7.0	4.3	A++
	5	5	5	14	24	0.90	0.90	0.90	2.51	4.30	9.50 (3.50-12.00)	2.37 (0.25-3.26)	4.01	7.0	4.3	A++
	5	5	5	18	18	0.93	0.93	0.93	3.35	3.35	9.50 (3.50-12.00)	2.37 (0.25-3.26)	4.01	7.0	4.2	A++
	5	5	7	7	7	1.45	1.45	2.03	2.03	2.03	9.00 (3.50-12.00)	2.18 (0.25-3.26)	4.14	7.0	4.3	A++
	5	5	7	7	9	1.44	1.44	2.02	2.02	2.59	9.50 (3.50-12.00)	2.37 (0.25-3.26)	4.01	7.0	4.3	A++
	5	5	7	7	12	1.32	1.32	1.85	1.85	3.17	9.50 (3.50-12.00)	2.37 (0.25-3.26)	4.01	7.0	4.3	A++
	5	5	7	7	14	1.25	1.25	1.75	1.75	3.50	9.50 (3.50-12.00)	2.37 (0.25-3.26)	4.01	7.0	4.3	A++
	5	5	7	7	18	1.13	1.13	1.58	1.58	4.07	9.50 (3.50-12.00)	2.37 (0.25-3.26)	4.01	7.0	4.3	A++
	5	5	7	7	22	1.03	1.03	1.45	1.45	4.54	9.50 (3.50-12.00)	2.37 (0.25-3.26)	4.01	7.0	4.3	A++
	5	5	7	7	24	0.99	0.99	1.39	1.39	4.75	9.50 (3.50-12.00)	2.37 (0.25-3.26)	4.01	7.0	4.3	A++
	5	5	7	9	9	1.36	1.36	1.90	2.44	2.44	9.50 (3.50-12.00)	2.37 (0.25-3.26)	4.01	7.0	4.3	A++
	5	5	7	9	12	1.25	1.25	1.75	2.25	3.00	9.50 (3.50-12.00)	2.37 (0.25-3.26)	4.01	7.0	4.3	A++
	5	5	7	9	14	1.19	1.19	1.66	2.14	3.33	9.50 (3.50-12.00)	2.37 (0.25-3.26)	4.01	7.0	4.3	A++
	5	5	7	9	18	1.08	1.08	1.51	1.94	3.89	9.50 (3.50-12.00)	2.37 (0.25-3.26)	4.01	7.0	4.3	A++
	5	5	7	9	22	0.99	0.99	1.39	1.78	4.35	9.50 (3.50-12.00)	2.37 (0.25-3.26)	4.01	7.0	4.3	A++
	5	5	7	9	24	0.95	0.95	1.33	1.71	4.56	9.50 (3.50-12.00)	2.37 (0.25-3.26)	4.01	7.0	4.3	A++
	5	5	7	12	12	1.16	1.16	1.62	2.78	2.78	9.50 (3.50-12.00)	2.37 (0.25-3.26)	4.01	7.0	4.3	A++
	5	5	7	12	14	1.10	1.10	1.55	2.65	3.09	9.50 (3.50-12.00)	2.37 (0.25-3.26)	4.01	7.0	4.3	A++
	5	5	7	12	18	1.01	1.01	1.41	2.43	3.64	9.50 (3.50-12.00)	2.37 (0.25-3.26)	4.01	7.0	4.3	A++
	5	5	7	12	22	0.93	0.93	1.30	2.24	4.10	9.50 (3.50-12.00)	2.37 (0.25-3.26)	4.01	7.0	4.3	A++
	5	5	7	12	24	0.90	0.90	1.25	2.15	4.30	9.50 (3.50-12.00)	2.37 (0.25-3.26)	4.01	7.0	4.3	A++
	5	5	7	14	14	1.06	1.06	1.48	2.96	2.96	9.50 (3.50-12.00)	2.37 (0.25-3.26)	4.01	7.0	4.3	A++
	5	5	7	14	18	0.97	0.97	1.36	2.71	3.49	9.50 (3.50-12.00)	2.37 (0.25-3.26)	4.01	7.0	4.3	A++
	5	5	7	14	22	0.90	0.90	1.25	2.51	3.94	9.50 (3.50-12.00)	2.37 (0.25-3.26)	4.01	7.0	4.3	A++
	5	5	7	18	18	0.90	0.90	1.25	3.23	3.23	9.50 (3.50-12.00)	2.37 (0.25-3.26)	4.01	7.0	4.3	A++
	5	5	9	9	9	1.28	1.28	2.31	2.31	2.31	9.50 (3.50-12.00)	2.37 (0.25-3.26)	4.01	7.0	4.3	A++
	5	5	9	9	12	1.19	1.19	2.14	2.14	2.85	9.50 (3.50-12.00)	2.37 (0.25-3.26)	4.01	7.0	4.3	A++
	5	5	9	9	14	1.13	1.13	2.04	2.04	3.17	9.50 (3.50-12.00)	2.37 (0.25-3.26)	4.01	7.0	4.3	A++
	5	5	9	9	18	1.03	1.03	1.86	1.86	3.72	9.50 (3.50-12.00)	2.37 (0.25-3.26)	4.01	7.0	4.3	A++
	5	5	9	9	22	0.95	0.95	1.71	1.71	4.18	9.50 (3.50-12.00)	2.37 (0.25-3.26)	4.01	7.0	4.3	A++
	5	5	9	9	24	0.91	0.91	1.64	1.64	4.38	9.50 (3.50-12.00)	2.37 (0.25-3.26)	4.01	7.0	4.3	A++
	5	5	9	12	12	1.10	1.10	1.99	2.65	2.65	9.50 (3.50-12.00)	2.37 (0.25-3.26)	4.01	7.0	4.3	A++
	5	5	9	12	14	1.06	1.06	1.90	2.53	2.96	9.50 (3.50-12.00)	2.37 (0.25-3.26)	4.01	7.0	4.3	A++
	5	5	9	12	18	0.97	0.97	1.74	2.33	3.49	9.50 (3.50-12.00)	2.37 (0.25-3.26)	4.01	7.0	4.3	A++
	5	5	9	12	22	0.90	0.90	1.61	2.15	3.94	9.50 (3.50-12.00)	2.37 (0.25-3.26)	4.01	7.0	4.3	A++
	5	5	9	14	14	1.01	1.01	1.82	2.83	2.83	9.50 (3.50-12.00)	2.37 (0.25-3.26)	4.01	7.0	4.3	A++
	5	5	9	14	18	0.93	0.93	1.68	2.61	3.35	9.50 (3.50-12.00)	2.37 (0.25-3.26)	4.01	7.0	4.3	A++
	5	5	12	12	12	1.03	1.03	2.48	2.48	2.48	9.50 (3.50-12.00)	2.37 (0.25-3.26)	4.01	7.0	4.3	A++
	5	5	12	12	14	0.99	0.99	2.38	2.38	2.77	9.50 (3.50-12.00)	2.37 (0.25-3.26)	4.01	7.0	4.3	A++
	5	5	12	12	18	0.91	0.91	2.19	2.19	3.29	9.50 (3.50-12.00)	2.37 (0.25-3.26)	4.01	7.0	4.3	A++
	5	5	12	14	14	0.95	0.95	2.28	2.66	2.66	9.50 (3.50-12.00)	2.37 (0.25-3.26)	4.01	7.0	4.3	A++
	5	5	12	14	18	0.88	0.88	2.11	2.46	3.17	9.50 (3.50-12.00)	2.37 (0.25-3.26)	4.01	7.0	4.3	A++
	5	5	14	14	14	0.91	0.91	2.56	2.56	2.56	9.50 (3.50-12.00)	2.37 (0.25-3.26)	4.01	7.0	4.3	A++
	5	7	7	7	7	1.44	2.02	2.02	2.02	2.02	9.50 (3.50-12.00)	2.37 (0.25-3.26)	4.01	7.0	4.3	A++
	5	7	7	7	9	1.36	1.90	1.90	1.90	2.44	9.50 (3.50-12.00)	2.37 (0.25-3.26)	4.01	7.0	4.3	A++
	5	7	7	7	12	1.25	1.75	1.75	1.75	3.00	9.50 (3.50-12.00)	2.37 (0.25-3.26)	4.01	7.0	4.3	A++
	5	7	7	7	14	1.19	1.66	1.66	1.66	3.33	9.50 (3.50-12.00)	2.37 (0.25-3.26)	4.01	7.0	4.3	A++
	5	7	7	7	18	1.08	1.51	1.51	1.51	3.89	9.50 (3.50-12.00)	2.37 (0.25-3.26)	4.01	7.0	4.3	A++
	5	7	7	7	22	0.99	1.39	1.39	1.39	4.35	9.50 (3.50-12.00)	2.37 (0.25-3.26)	4.01	7.0	4.3	A++
	5	7	7	7	24	0.95	1.33	1.33	1.33	4.56	9.50 (3.50-12.00)	2.37 (0.25-3.26)	4.01	7.0	4.3	A++
	5	7	7	9	9	1.28	1.80	1.80	2.31	2.31	9.50 (3.50-12.00)	2.37 (0.25-3.26)	4.01	7.0	4.3	A++
	5	7	7	9	12	1.19	1.66	1.66	2.14	2.85	9.50 (3.50-12.00)	2.37 (0.25-3.26)	4.01	7.0	4.3	A++
	5	7	7	9	14	1.13	1.58	1.58	2.04	3.17	9.50 (3.50-12.00)	2.37 (0.25-3.26)	4.01	7.0	4.3	A++
	5	7	7	9	18	1.03	1.45	1.45	1.86	3.72	9.50 (3.50-12.00)	2.37 (0.25-3.26)	4.01	7.0	4.3	A++
	5	7	7	9	22	0.95	1.33	1.33	1.71	4.18	9.50 (3.50-12.00)	2.37 (0.25-3.26)	4.01	7.0	4.3	A++
	5	7	7	9	24	0.91	1.28	1.28	1.64	4.38	9.50 (3.50-12.00)	2.37 (0.25-3.26)	4.01	7.0	4.3	A++
	5	7	7	12	12	1.10	1.55	1.55	2.65	2.65	9.50 (3.50-12.00)	2.37 (0.25-3.26)	4.01	7.0	4.3	A++
	5	7	7	12	14	1.06	1.48	1.48	2.53	2.96	9.50 (3.50-12.00)	2.37 (0.25-3.26)	4.01	7.0	4.3	A++
	5	7	7	12	18	0.97	1.36	1.36	2.33	3.49	9.50 (3.50-12.00)	2.37 (0.25-3.26)	4.01	7.0	4.3	A++
	5	7	7	12	22	0.90	1.25	1.25	2.15	3.94	9.50 (3.50-12.00)	2.37 (0.25-3.26)	4.01	7.0	4.3	A++
	5	7	7	14	14	1.01	1.41	1.41	2.83	2.83	9.50 (3.50-12.00)	2.37 (0.25-3.26)	4.01	7.0	4.3	A++
	5	7	7	14	18	0.93	1.30	1.30	2.61	3.35	9.50 (3.50-12.00)	2.37 (0.25-3.26)	4.01	7.0	4.3	A++
	5	7	9	9	9	1.22	1.71	2.19	2.19	2.19	9.50 (3.50-12.00)	2.37 (0.25-3.26)	4.01	7.0	4.3	A++
	5	7	9	9	12	1.13	1.58	2.04	2.04	2.71	9.50 (3.50-12.00)	2.37 (0.25-3.26)	4.01	7.0	4.3	A++
	5	7	9	9	14	1.08	1.51	1.94	1.94	3.02	9.50 (3.50-12.00)	2.37 (0.25-3.26)	4.01	7.0	4.3	A++
	5	7	9	9	18	0.99	1.39	1.78	1.78	3.56	9.50 (3.50-12.00)	2.37 (0.25-3.26)	4.01	7.0	4.3	A++
	5	7	9	9	22	0.91	1.28	1.64	1.64	4.02	9.50 (3.50-12.00)	2.37 (0.25-3.26)	4.01	7.0	4.3	A++
	5	7	9	9	24	0.88	1.23	1.58	1.58	4.22	9.50 (3.50-12.00)	2.37 (0.25-3.26)	4.01	7.0	4.3	A++
	5	7	9	12	12	1.06	1.48	1.90	2.53	2.53	9.50 (3.50-12.00)	2.37 (0.25-3.26)	4.01	7.0	4.3	A++
	5	7	9	12	14	1.01	1.41	1.82	2.43	2.83	9.50 (3.50-12.00)	2.37 (0.25-3.26)	4.01	7.0	4.3	A++

5-unit Multi-split heating

AOEG36KBTA5	Combination of Indoor Units					Heating Operation										
						Heating Capacity						Input Power (Min. - Max.)	COP	Seasonal Data		
						Unit 1	Unit 2	Unit 3	Unit 4	Unit 5	Total Capacity (Min. - Max.)			Pdesign	SCOP	Energy efficiency
						kW	kW	kW	kW	kW	kW	kW		kW		
5-unit connection	5	7	9	12	18	0.93	1.30	1.68	2.24	3.35	9.50 (3.50-12.00)	2.37 (0.25-3.26)	4.01	7.0	4.3	A++
	5	7	9	14	14	0.97	1.36	1.74	2.71	2.71	9.50 (3.50-12.00)	2.37 (0.25-3.26)	4.01	7.0	4.3	A++
	5	7	9	14	18	0.90	1.25	1.61	2.51	3.23	9.50 (3.50-12.00)	2.37 (0.25-3.26)	4.01	7.0	4.3	A++
	5	7	12	12	12	0.99	1.39	2.38	2.38	2.38	9.50 (3.50-12.00)	2.37 (0.25-3.26)	4.01	7.0	4.3	A++
	5	7	12	12	14	0.95	1.33	2.28	2.28	2.66	9.50 (3.50-12.00)	2.37 (0.25-3.26)	4.01	7.0	4.3	A++
	5	7	12	12	18	0.88	1.23	2.11	2.11	3.17	9.50 (3.50-12.00)	2.37 (0.25-3.26)	4.01	7.0	4.3	A++
	5	7	12	14	14	0.91	1.28	2.19	2.56	2.56	9.50 (3.50-12.00)	2.37 (0.25-3.26)	4.01	7.0	4.3	A++
	5	7	14	14	14	0.88	1.23	2.46	2.46	2.46	9.50 (3.50-12.00)	2.37 (0.25-3.26)	4.01	7.0	4.3	A++
	5	9	9	9	9	1.16	2.09	2.09	2.09	2.09	9.50 (3.50-12.00)	2.37 (0.25-3.26)	4.01	7.0	4.3	A++
	5	9	9	9	12	1.08	1.94	1.94	1.94	2.59	9.50 (3.50-12.00)	2.37 (0.25-3.26)	4.01	7.0	4.3	A++
	5	9	9	9	14	1.03	1.86	1.86	1.86	2.89	9.50 (3.50-12.00)	2.37 (0.25-3.26)	4.01	7.0	4.3	A++
	5	9	9	9	18	0.95	1.71	1.71	1.71	3.42	9.50 (3.50-12.00)	2.37 (0.25-3.26)	4.01	7.0	4.3	A++
	5	9	9	9	22	0.88	1.58	1.58	1.58	3.87	9.50 (3.50-12.00)	2.37 (0.25-3.26)	4.01	7.0	4.3	A++
	5	9	9	12	12	1.01	1.82	1.82	2.43	2.43	9.50 (3.50-12.00)	2.37 (0.25-3.26)	4.01	7.0	4.3	A++
	5	9	9	12	14	0.97	1.74	1.74	2.33	2.71	9.50 (3.50-12.00)	2.37 (0.25-3.26)	4.01	7.0	4.3	A++
	5	9	9	12	18	0.90	1.61	1.61	2.15	3.23	9.50 (3.50-12.00)	2.37 (0.25-3.26)	4.01	7.0	4.3	A++
	5	9	9	14	14	0.93	1.68	1.68	2.61	2.61	9.50 (3.50-12.00)	2.37 (0.25-3.26)	4.01	7.0	4.3	A++
	5	9	12	12	12	0.95	1.71	2.28	2.28	2.28	9.50 (3.50-12.00)	2.37 (0.25-3.26)	4.01	7.0	4.3	A++
	5	9	12	12	14	0.91	1.64	2.19	2.19	2.56	9.50 (3.50-12.00)	2.37 (0.25-3.26)	4.01	7.0	4.3	A++
	5	9	12	14	14	0.88	1.58	2.11	2.46	2.46	9.50 (3.50-12.00)	2.37 (0.25-3.26)	4.01	7.0	4.3	A++
	5	12	12	12	12	0.90	2.15	2.15	2.15	2.15	9.50 (3.50-12.00)	2.37 (0.25-3.26)	4.01	7.0	4.3	A++
	7	7	7	7	7	2.12	2.12	2.12	2.12	2.12	10.60 (3.5-12.0)	2.36 (0.25-3.25)	4.50	7.0	4.6	A++
	7	7	7	7	9	2.01	2.01	2.01	2.01	2.56	10.60 (3.5-12.0)	2.36 (0.25-3.25)	4.50	7.0	4.6	A++
	7	7	7	7	12	1.86	1.86	1.86	1.86	3.16	10.60 (3.5-12.0)	2.36 (0.25-3.25)	4.50	7.0	4.6	A++
	7	7	7	7	14	1.77	1.77	1.77	1.77	3.52	10.60 (3.5-12.0)	2.36 (0.25-3.25)	4.50	7.0	4.6	A++
	7	7	7	7	18	1.61	1.61	1.61	1.61	4.16	10.60 (3.5-12.0)	2.36 (0.25-3.25)	4.50	7.0	4.6	A++
	7	7	7	7	22*1	1.48	1.48	1.48	1.48	4.68	10.60 (3.5-12.0)	2.36 (0.25-3.25)	4.50	7.0	4.6	A++
	7	7	7	7	24	1.43	1.43	1.43	1.43	4.88	10.60 (3.5-12.0)	2.36 (0.25-3.25)	4.50	7.0	4.6	A++
	7	7	7	9	9	1.90	1.90	1.90	2.45	2.45	10.60 (3.5-12.0)	2.36 (0.25-3.25)	4.50	7.0	4.6	A++
	7	7	7	9	12	1.77	1.77	1.77	2.26	3.03	10.60 (3.5-12.0)	2.36 (0.25-3.25)	4.50	7.0	4.6	A++
	7	7	7	9	14	1.69	1.69	1.69	2.16	3.37	10.60 (3.5-12.0)	2.36 (0.25-3.25)	4.50	7.0	4.6	A++
	7	7	7	9	18	1.55	1.55	1.55	1.99	3.96	10.60 (3.5-12.0)	2.36 (0.25-

REFRIGERANT R410A

6-unit Multi-split Combination Table–Cooling

6-unit Multi-split cooling

AOYG45LBLA6	Combination of Indoor Units						Cooling Operation								
							Cooling Capacity							Input Power (Min. - Max.)	EER
							Unit 1	Unit 2	Unit 3	Unit 4	Unit 5	Unit 6	Total Capacity (Min. - Max.)		
							kW	kW	kW	kW	kW	kW	kW	kW	
2-unit connection	12	24	-	-	-	-	3.50	7.00	-	-	-	-	10.5 (3.5-11.5)	3.06 (0.8-3.32)	3.43
	14	24	-	-	-	-	4.00	7.00	-	-	-	-	11.0 (3.5-12.1)	3.28 (0.8-3.70)	3.35
	18	18	-	-	-	-	5.00	5.00	-	-	-	-	10.0 (3.5-11.5)	2.92 (0.8-3.32)	3.42
	18	24	-	-	-	-	5.00	7.00	-	-	-	-	12.0 (3.5-13.4)	3.75 (0.8-4.46)	3.20
	24	24	-	-	-	-	6.25	6.25	-	-	-	-	12.5 (3.5-14.0)	4.01 (0.8-4.84)	3.12
3-unit connection	7	7	24	-	-	-	2.00	2.00	7.00	-	-	-	11.0 (3.5-12.1)	3.19 (0.8-3.70)	3.45
	7	9	18	-	-	-	2.00	2.50	5.00	-	-	-	9.5 (3.5-10.8)	2.55 (0.8-2.93)	3.73
	7	9	24	-	-	-	2.00	2.50	7.00	-	-	-	11.5 (3.5-12.7)	3.41 (0.8-4.08)	3.37
	7	12	18	-	-	-	2.00	3.50	5.00	-	-	-	10.5 (3.5-11.8)	3.02 (0.8-3.51)	3.48
	7	12	24	-	-	-	2.00	3.50	6.90	-	-	-	12.4 (3.5-13.7)	3.82 (0.8-4.65)	3.25
	7	14	14	-	-	-	2.00	4.00	4.00	-	-	-	10.0 (3.5-11.1)	2.81 (0.8-3.13)	3.56
	7	14	18	-	-	-	2.00	4.00	5.00	-	-	-	11.0 (3.5-12.4)	3.23 (0.8-3.89)	3.41
	7	14	24	-	-	-	1.94	3.89	6.67	-	-	-	12.5 (3.5-14.0)	3.89 (0.8-4.84)	3.21
	7	18	18	-	-	-	2.00	5.00	5.00	-	-	-	12.0 (3.5-13.7)	3.69 (0.8-4.65)	3.25
	7	18	24	-	-	-	1.79	4.59	6.12	-	-	-	12.5 (3.5-14.0)	3.87 (0.8-4.84)	3.23
	7	24	24	-	-	-	1.60	5.45	5.45	-	-	-	12.5 (3.5-14.0)	3.83 (0.8-4.84)	3.26
	9	9	18	-	-	-	2.50	2.50	5.00	-	-	-	10.0 (3.5-11.5)	2.84 (0.8-3.32)	3.52
	9	9	24	-	-	-	2.50	2.50	7.00	-	-	-	12.0 (3.5-13.4)	3.65 (0.8-4.46)	3.29
	9	12	14	-	-	-	2.50	3.50	4.00	-	-	-	10.0 (3.5-11.1)	2.81 (0.8-3.13)	3.56
	9	12	18	-	-	-	2.50	3.50	5.00	-	-	-	11.0 (3.5-12.4)	3.23 (0.8-3.89)	3.41
	9	12	24	-	-	-	2.50	3.33	6.67	-	-	-	12.5 (3.5-14.0)	3.89 (0.8-4.84)	3.21
	9	14	14	-	-	-	2.50	4.00	4.00	-	-	-	10.5 (3.5-11.8)	3.02 (0.8-3.51)	3.48
	9	14	18	-	-	-	2.50	4.00	5.00	-	-	-	11.5 (3.5-13.0)	3.45 (0.8-4.27)	3.33
	9	14	24	-	-	-	2.40	3.72	6.38	-	-	-	12.5 (3.5-14.0)	3.88 (0.8-4.84)	3.22
	9	18	18	-	-	-	2.50	5.00	5.00	-	-	-	12.5 (3.5-14.0)	3.89 (0.8-4.84)	3.21
	9	18	24	-	-	-	2.21	4.41	5.88	-	-	-	12.5 (3.5-14.0)	3.86 (0.8-4.84)	3.24
	9	24	24	-	-	-	1.98	5.26	5.26	-	-	-	12.5 (3.5-14.0)	3.82 (0.8-4.84)	3.27
	12	12	12	-	-	-	3.50	3.50	3.50	-	-	-	10.5 (3.5-11.5)	2.98 (0.8-3.32)	3.52
	12	12	14	-	-	-	3.50	3.50	4.00	-	-	-	11.0 (3.5-12.1)	3.19 (0.8-3.70)	3.45
	12	12	18	-	-	-	3.50	3.50	5.00	-	-	-	12.0 (3.5-13.4)	3.65 (0.8-4.46)	3.29
	12	12	24	-	-	-	3.13	3.13	6.24	-	-	-	12.5 (3.5-14.0)	3.87 (0.8-4.84)	3.23
	12	14	14	-	-	-	3.50	4.00	4.00	-	-	-	11.5 (3.5-12.7)	3.41 (0.8-4.08)	3.37
	12	14	18	-	-	-	3.50	4.00	5.00	-	-	-	12.5 (3.5-14.0)	3.89 (0.8-4.84)	3.21
	12	14	24	-	-	-	3.00	3.50	6.00	-	-	-	12.5 (3.5-14.0)	3.86 (0.8-4.84)	3.24
	12	18	18	-	-	-	3.12	4.69	4.69	-	-	-	12.5 (3.5-14.0)	3.87 (0.8-4.84)	3.23
	12	18	24	-	-	-	2.78	4.17	5.55	-	-	-	12.5 (3.5-14.0)	3.85 (0.8-4.84)	3.25
	12	24	24	-	-	-	2.50	5.00	5.00	-	-	-	12.5 (3.5-14.0)	3.81 (0.8-4.84)	3.28
	14	14	14	-	-	-	4.00	4.00	4.00	-	-	-	12.0 (3.5-13.4)	3.65 (0.8-4.46)	3.29
	14	14	18	-	-	-	3.80	3.80	4.90	-	-	-	12.5 (3.5-14.0)	3.88 (0.8-4.84)	3.22
	14	14	24	-	-	-	3.37	3.37	5.76	-	-	-	12.5 (3.5-14.0)	3.85 (0.8-4.84)	3.25
	14	18	18	-	-	-	3.50	4.50	4.50	-	-	-	12.5 (3.5-14.0)	3.86 (0.8-4.84)	3.24
	14	18	24	-	-	-	3.13	4.02	5.35	-	-	-	12.5 (3.5-14.0)	3.83 (0.8-4.84)	3.26
	14	24	24	-	-	-	2.82	4.84	4.84	-	-	-	12.5 (3.5-14.0)	3.80 (0.8-4.84)	3.29
	18	18	18	-	-	-	4.17	4.17	4.17	-	-	-	12.5 (3.5-14.0)	3.85 (0.8-4.84)	3.25
	18	18	24	-	-	-	3.75	3.75	5.00	-	-	-	12.5 (3.5-14.0)	3.81 (0.8-4.84)	3.28
4-unit connection	7	7	7	14	-	-	2.00	2.00	2.00	4.00	-	-	10.0 (3.5-11.1)	2.50 (0.8-3.13)	4.00
	7	7	7	18	-	-	2.00	2.00	2.00	5.00	-	-	11.0 (3.5-12.4)	3.06 (0.8-3.89)	3.59
	7	7	7	24	-	-	1.94	1.94	1.94	6.68	-	-	12.5 (3.5-14.0)	3.77 (0.8-4.84)	3.32
	7	7	9	12	-	-	2.00	2.00	2.50	3.50	-	-	10.0 (3.5-11.1)	2.50 (0.8-3.13)	4.00
	7	7	9	14	-	-	2.00	2.00	2.50	4.00	-	-	10.5 (3.5-11.8)	2.79 (0.8-3.51)	3.76
	7	7	9	18	-	-	2.00	2.00	2.50	5.00	-	-	11.5 (3.5-13.0)	3.33 (0.8-4.27)	3.45
	7	7	9	24	-	-	1.86	1.86	2.39	6.39	-	-	12.5 (3.5-14.0)	3.75 (0.8-4.84)	3.33
	7	7	12	12	-	-	2.00	2.00	3.50	3.50	-	-	11.0 (3.5-12.1)	3.00 (0.8-3.70)	3.67
	7	7	12	14	-	-	2.00	2.00	3.50	4.00	-	-	11.5 (3.5-12.7)	3.27 (0.8-4.08)	3.52
	7	7	12	18	-	-	2.00	2.00	3.50	5.00	-	-	12.5 (3.5-14.0)	3.78 (0.8-4.84)	3.31
	7	7	12	24	-	-	1.75	1.75	3.00	6.00	-	-	12.5 (3.5-14.0)	3.74 (0.8-4.84)	3.34
	7	7	14	14	-	-	2.00	2.00	4.00	4.00	-	-	12.0 (3.5-13.4)	3.51 (0.8-4.46)	3.42
	7	7	14	18	-	-	1.90	1.90	3.80	4.90	-	-	12.5 (3.5-14.0)	3.77 (0.8-4.84)	3.32
	7	7	14	24	-	-	1.68	1.68	3.37	5.77	-	-	12.5 (3.5-14.0)	3.73 (0.8-4.84)	3.35
	7	7	18	18	-	-	1.75	1.75	4.50	4.50	-	-	12.5 (3.5-14.0)	3.74 (0.8-4.84)	3.34
	7	7	18	24	-	-	1.56	1.56	4.02	5.36	-	-	12.5 (3.5-14.0)	3.70 (0.8-4.84)	3.38
	7	7	24	24	-	-	1.41	1.41	4.84	4.84	-	-	12.5 (3.5-14.0)	3.67 (0.8-4.84)	3.41
	7	9	9	9	-	-	2.00	2.50	2.50	2.50	-	-	9.5 (3.5-10.8)	2.31 (0.8-2.93)	4.11
	7	9	9	12	-	-	2.00	2.50	2.50	3.50	-	-	10.5 (3.5-11.8)	2.79 (0.8-3.51)	3.76
	7	9	9	14	-	-	2.00	2.50	2.50	4.00	-	-	11.0 (3.5-12.4)	3.06 (0.8-3.89)	3.59
	7	9	9	18	-	-	2.00	2.50	2.50	5.00	-	-	12.0 (3.5-13.7)	3.57 (0.8-4.65)	3.36
	7	9	9	24	-	-	1.79	2.30	2.30	6.11	-	-	12.5 (3.5-14.0)	3.74 (0.8-4.84)	3.34
	7	9	12	12	-	-	2.00	2.50	3.50	3.50	-	-	11.5 (3.5-12.7)	3.27 (0.8-4.08)	3.52
	7	9	12	14	-	-	2.00	2.50	3.50	4.00	-	-	12.0 (3.5-13.4)	3.51 (0.8-4.46)	3.42
	7	9	12	18	-	-	1.90	2.45	3.26	4.89	-	-	12.5 (3.5-14.0)	3.77 (0.8-4.84)	3.32
	7	9	12	24	-	-	1.68	2.16	2.88	5.78	-	-	12.5 (3.5-14.0)	3.73 (0.8-4.84)	3.35
	7	9	14	14	-	-	2.00	2.50	4.00	4.00	-	-	12.5 (3.5-14.0)	3.78 (0.8-4.84)	3.31
	7	9	14	18	-	-	1.82	2.34	3.65	4.69	-	-	12.5 (3.5-14.0)	3.75 (0.8-4.84)	3.33
	7	9	14	24	-	-	1.62	2.08	3.24	5.56	-	-	12.5 (3.5-14.0)	3.71 (0.8-4.84)	3.37
	7	9	18	18	-	-	1.68	2.16	4.33	4.33	-	-	12.5 (3.5-14.0)	3.73 (0.8-4.84)	3.35
	7	9	18	24	-	-	1.51	1.94	3.88	5.17	-	-	12.5 (3.5-14.0)	3.69 (0.8-4.84)	3.39
	7	12	12	12	-	-	1.90	3.50	3.50	3.50	-	-	12.4 (3.5-13.7)	3.69 (0.8-4.65)	3.36
	7	12	12	14	-	-	1.94	3.33	3.33	3.90	-	-	12.5 (3.5-14.0)	3.77 (0.8-4.84)	3.32
	7	12	12	18	-	-	1.79	3.06	3.06	4.59	-	-	12.5 (3.5-14.0)	3.74 (0.8-4.84)	3.34
	7	12	12	24	-	-	1.59	2.73	2.73	5.45	-	-	12.5 (3.5-14.0)	3.71 (0.8-4.84)	3.37
	7	12	14	14	-	-	1.87	3.19	3.72	3.72	-	-	12.5 (3.5-14.0)	3.75 (0.8-4.84)	3.33
	7	12	14	18	-	-	1.72	2.94	3.43	4.41	-	-	12.5 (3.5-14.0)	3.73 (0.8-4.84)	3.35
	7	12	14	24	-	-	1.54	2.63	3.07	5.26	-	-	12.5 (3.5-14.0)	3.70 (0.8-4.84)	3.38
	7	12	18	18	-	-	1.59	2.73	4.09	4.09	-	-	12.5 (3.5-14.0)	3.71 (0.8-4.84)	3.37
	7	12	18	24	-	-	1.43	2.46	3.69	4.92	-	-	12.5 (3.5-14.0)	3.68 (0.8-4.84)	3.40
	7	14	14	14	-	-	1.79	3.57	3.57	3.57	-	-	12.5 (3.5-14.0)	3.74 (0.8-4.84)	3.34
	7	14	14	18	-	-	1.65	3.30	3.30	4.25	-	-	12.5 (3.5-14.0)	3.72 (0.8-4.84)	3.36
	7	14	14	24	-	-	1.48	2.97	2.97	5.08	-	-	12.5 (3.5-14.0)	3.69 (0.8-4.84)	3.39
	7	14	18	18	-	-	1.53	3.07	3.95	3.95	-	-	12.5 (3.5-14.0)	3.70 (0.8-4.84)	3.38
	7	18	18	18	-	-	1.43	3.69	3.69	3.69	-	-	12.5 (3.5-14.0)	3.68 (0.8-4.84)	3.40
	9	9	9	9	-	-	2.50	2.50	2.50	2.50	-	-	10.0 (3.5-11.5)	2.59 (0.8-3.32)	3.86
	9	9	9	12	-	-	2.50	2.50	2.50	3.50	-	-	11.0 (3.5-12.4)	3.06 (0.8-3.89)	3.59

6-unit Multi-split cooling

AOYG45LBLA6	Combination of Indoor Units						Cooling Operation								
							Cooling Capacity							Input Power (Min. - Max.)	EER
							Unit 1	Unit 2	Unit 3	Unit 4	Unit 5	Unit 6	Total Capacity (Min. - Max.)		
							kW	kW	kW	kW	kW	kW	kW	kW	
4-unit connection	9	9	9	14	-	-	2.50	2.50	2.50	4.00	-	-	11.5 (3.5-13.0)	3.33 (0.8-4.27)	3.45
	9	9	9	18	-	-	2.50	2.50	2.50	5.00	-	-	12.5 (3.5-14.0)	3.77 (0.8-4.84)	3.32
	9	9	9	24	-	-	2.21	2.21	2.21	5.87	-	-	12.5 (3.5-14.0)	3.73 (0.8-4.84)	3.35
	9	9	12	12	-	-	2.50	2.50	3.50	3.50	-	-	12.0 (3.5-13.4)	3.51 (0.8-4.46)	3.42
	9	9	12	14	-	-	2.50	2.50	3.50	4.00	-	-	12.5 (3.5-14.0)	3.78 (0.8-4.84)	3.31
	9	9	12	18	-	-	2.34	2.34	3.13	4.69	-	-	12.5 (3.5-14.0)	3.75 (0.8-4.84)	3.33
	9	9	12	24	-	-	2.08	2.08	2.78	5.56	-	-	12.5 (3.5-14.0)	3.71 (0.8-4.84)	3.37
	9	9	14	14	-	-	2.45	2.45	3.80	3.80	-	-	12.5 (3.5-14.0)	3.77 (0.8-4.84)	3.32
	9	9	14	18	-	-	2.25	2.25	3.50	4.50	-	-	12.5 (3.5-14.0)	3.74 (0.8-4.84)	3.34
	9	9	14	24	-	-	2.01	2.01	3.13	5.35	-	-	12.5 (3.5-14.0)	3.70 (0.8-4.84)	3.38
	9	9	18	18	-	-	2.08	2.08	4.17	4.17	-	-	12.5 (3.5-14.0)	3.71 (0.8-4.84)	3.37
	9	9	18	24	-	-	1.88	1.88	3.75	4.99	-	-	12.5 (3.5-14.0)	3.68 (0.8-4.84)	3.40
	9	12	12	12	-	-	2.51	3.33	3.33	3.33	-	-	12.5 (3.5-14.0)	3.77 (0.8-4.84)	3.32
	9	12	12	14	-	-	2.39	3.19	3.19	3.73	-	-	12.5 (3.5-14.0)	3.75 (0.8-4.84)	3.33
	9	12	12	18	-	-	2.21	2.94	2.94	4.41	-	-	12.5 (3.5-14.0)	3.73 (0.8-4.84)	3.35
	9	12	12	24	-	-	1.97	2.63	2.63	5.27	-	-	12.5 (3.5-14.0)	3.70 (0.8-4.84)	3.38
	9	12	14	14	-	-	2.30	3.06	3.57	3.57	-	-	12.5 (3.5-14.0)	3.74 (0.8-4.84)	3.34
	9	12	14	18	-	-	2.12	2.83	3.30	4.25	-	-	12.5 (3.5-14.0)	3.72 (0.8-4.84)	3.36
	9	12	14	24	-	-	1.91	2.54	2.97	5.08	-	-	12.5 (3.5-14.0)	3.69 (0.8-4.84)	3.39
	9	12	18	18	-	-	1.97	2.63	3.95	3.95	-	-	12.5 (3.5-14.0)	3.70 (0.8-4.84)	3.38
	9	14	14	14	-	-	2.21	3.43	3.43	3.43	-	-	12.5 (3.5-14.0)	3.73 (0.8-4.84)	3.35
	9	14	14	18	-	-	2.05	3.18	3.18	4.09	-	-	12.5 (3.5-14.0)	3.71 (0.8-4.84)	3.37
	9	14	14	24	-	-	1.84	2.87	2.87	4.92	-	-	12.5 (3.5-14.0)	3.68 (0.8-4.84)	3.40
	9	14	18	18	-	-	1.91	2.97	3.81	3.81	-	-	12.5 (3.5-14.0)	3.69 (0.8-4.84)	3.39
	12	12	12	12	-	-	3.13	3.13	3.13	3.13	-	-	12.5 (3.5-14.0)	3.75 (0.8-4.84)	3.33
	12	12	12	14	-	-	3.00	3.00	3.00	3.50	-	-	12.5 (3.5-14.0)	3.74 (0.8-4.84)	3.34
	12	12	12	18	-	-	2.78	2.78	2.78	4.16	-	-	12.5 (3.5-14.0)	3.71 (0.8-4.84)	3.37
	12	12	12	24	-	-	2.50	2.50	2.50	5.00	-	-	12.5 (3.5-14.0)	3.68 (0.8-4.84)	3.40
	12	12	14	14	-	-	2.88	2.88	3.37	3.37	-	-	12.5 (3.5-14.0)	3.73 (0.8-4.84)	3.35
	12	12	14	18	-	-	2.68	2.68	3.13	4.01	-	-	12.5 (3.5-14.0)	3.70 (0.8-4.84)	3.38
	12	12	14	24	-	-	2.42	2.42	2.82	4.84	-	-	12.5 (3.5-14.0)	3.67 (0.8-4.84)	3.41
	12	12	18	18	-	-	2.50	2.50	3.75	3.75	-	-	12.5 (3.5-14.0)	3.68 (0.8-4.84)	3.40
	12	14	14	14	-	-	2.78	3.24	3.24	3.24	-	-	12.5 (3.5-14.0)	3.71 (0.8-4.84)	3.37
	12	14	14	18	-	-	2.59	3.02	3.02	3.87	-	-	12.5 (3.5-14.0)	3.69 (0.8-4.84)	3.39
	12	14	18	18	-	-	2.42	2.82	3.63	3.63	-	-	12.5 (3.5-14.0)	3.67 (0.8-4.84)	3.41
5-unit connection	7	7	7	7	7	-	2.00	2.00	2.00	2.00	2.00	-	10.0 (3.5-11.1)	2.44 (0.8-3.13)	4.10
	7	7	7	7	9	-	2.00	2.00	2.00	2.00	2.50	-	10.5 (3.5-11.8)	2.72 (0.8-3.51)	3.86
	7	7	7	7	12	-	2.00	2.00	2.00	2.00	3.50	-	11.5 (3.5-12.7)	3.18 (0.8-4.08)	3.62
	7	7	7	7	14	-	2.00	2.00	2.00	2.00	4.00	-	12.0 (3.5-13.4)	3.41 (0.8-4.46)	3.52
	7	7	7	7	18	-	1.90	1.90	1.90	1.90	4.90	-	12.5 (3.5-14.0)	3.65 (0.8-4.84)	3.42
	7	7	7	7	24	-	1.68	1.68	1.68	1.68	5.78	-	12.5 (3.5-14.0)	3.61 (0.8-4.84)	3.46
	7	7	7	9	9	-	2.00	2.00	2.00	2.50	2.50	-	11.0 (3.5-12.4)	2.98 (0.8-3.89)	3.69
	7	7	7	9	12	-	2.00	2.00	2.00	2.50	3.50	-	12.0 (3.5-13.4)	3.41 (0.8-4.46)	3.52
	7	7	7	9	14	-	2.00	2.00	2.00	2.50	4.00	-	12.5 (3.5-14.0)	3.67 (0.8-4.84)	3.41
	7	7	7	9	18	-	1.82	1.82	1.82	2.34	4.70	-	12.5 (3.5-14.0)	3.64 (0.8-4.84)	3.43
	7	7	7	9	24	-	1.62	1.62	1.62	2.08	5.56	-	12.5 (3.5-14.0)	3.60 (0.8-4.84)	3.47
	7	7	7	12	12	-	1.94	1.94	1.94	3.34	3.34	-	12.5 (3.5-14.0)	3.65 (0.8-4.84)	3.42
	7	7	7	12	14	-	1.86	1.86	1.86	3.19	3.73	-	12.5 (3.5-14.0)	3.64 (0.8-4.84)	3.43
	7	7	7	12	18	-	1.72	1.72	1.72	2.94	4.40	-	12.5 (3.5-14.0)	3.62 (0.8-4.84)	3.45
	7	7	7	12	24	-	1.54	1.54	1.54	2.63	5.25	-	12.5 (3.5-14.0)	3.58 (0.8-4.84)	3.49
	7	7	7	14	14	-	1.79	1.79	1.79	3.57	3.57	-	12.5 (3.5-14.0)	3.63 (0.8-4.84)	3.44
	7	7	7	14	18	-	1.65	1.65	1.65	3.30	4.25	-	12.5 (3.5-14.0)	3.60 (0.8-4.84)	3.47
	7	7	7	14	24	-	1.48	1.48	1.48	2.97	5.09	-	12.5 (3.5-14.0)	3.57 (0.8-4.84)	3.50
	7	7	7	18	18	-	1.54	1.54	1.54	3.94	3.94	-	12.5 (3.5-14.0)	3.58 (0.8-4.84)	3.49
	7	7	9	9	9	-	2.00	2.00	2.50	2.50	2.50	-	11.5 (3.5-13.0)	3.24 (0.8-4.27)	3.55
	7	7	9	9	12	-	2.00	2.00	2.50	2.50	3.50	-	12.5 (3.5-14.0)	3.67 (0.8-4.84)	3.41
	7	7	9	9	14	-	1.90	1.90	2.45	2.45	3.80	-	12.5 (3.5-14.0)	3.65 (0.8-4.84)	3.42
	7	7	9	9	18	-	1.75	1.75	2.25	2.25	4.50	-	12.5 (3.5-14.0)	3.62 (0.8-4.84)	3.45
	7	7	9	9	24	-	1.56	1.56	2.01	2.01	5.36	-	12.5 (3.5-14.0)	3.59 (0.8-4.84)	3.48
	7	7	9	12	12	-	1.86	1.86	2.40	3.19	3.19	-	12.5 (3.5-14.0)	3.64 (0.8-4.84)	3.43
	7	7	9	12	14	-	1.79	1.79	2.30	3.06	3.56	-	12.5 (3.5-14.0)	3.63 (0.8-4.84)	3.44
	7	7	9	12	18	-	1.65	1.65	2.12	2.83	4.25	-	12.5 (3.5-14.0)	3.60 (0.8-4.84)	3.47
	7	7	9	12	24	-	1.48	1.48	1.91	2.54	5.09	-	12.5 (3.5-14.0)	3.57 (0.8-4.84)	3.50
	7	7	9	14	14	-	1.72	1.72	2.20	3.43	3.43	-	12.5 (3.5-14.0)	3.62 (0.8-4.84)	3.45
	7	7	9	14	18	-	1.59	1.59	2.05	3.18	4.09	-	12.5 (3.5-14.0)	3.59 (0.8-4.84)	3.48
	7	7	9	14	24	-	1.43	1.43	1.84	2.87	4.93	-	12.5 (3.5-14.0)	3.56 (0.8-4.84)	3.51
	7	7	9	18	18	-	1.48	1.48	1.92	3.81	3.81	-	12.5 (3.5-14.0)	3.57 (0.8-4.84)	3.50
	7	7	12	12	12	-	1.75	1.75	3.00	3.00	3.00	-	12.5 (3.5-14.0)	3.62 (0.8-4.84)	3.45
	7	7	12	12	14	-	1.68	1.68	2.88	2.88	3.38	-	12.5 (3.5-14.0)	3.61 (0.8-4.84)	3.46
	7	7	12	12	18	-	1.56	1.56	2.68	2.68	4.02	-	12.5 (3.5-14.0)	3.59 (0.8-4.84)	3.48
	7	7	12	12	24	-	1.41	1.41	2.42	2.42	4.84	-	12.5 (3.5-14.0)	3.55 (0.8-4.84)	3.52
	7	7	12	14	14	-	1.62	1.62	2.78	3.24	3.24	-	12.5 (3.5-14.0)	3.60 (0.8-4.84)	3.47
	7	7	12	14	18	-	1.51	1.51	2.59	3.02	3.87	-	12.5 (3.5-14.0)	3.57 (0.8-4.84)	3.50
	7	7	12	18	18	-	1.41	1.41	2.42	3.63	3.63	-	12.5 (3.5-14.0)	3.55 (0.8-4.84)	3.52
	7	7	14	14	14	-	1.56	1.56	3.13	3.13	3.13	-	12.5 (3.5-14.0)	3.59 (0.8-4.84)	3.48
	7	7	14	14	18	-	1.46	1.46	2.92	2.92	3.74	-	12.5 (3.5-14.0)	3.56 (0.8-4.84)	3.51
	7	9	9	9	9	-	2.00	2.50	2.50	2.50	2.50	-	12.0 (3.5-13.7)	3.47 (0.8-4.65)	3.46
	7	9	9	9	12	-	1.90	2.45	2.45	2.45	3.25	-	12.5 (3.5-14.0)	3.65 (0.8-4.84)	3.42
	7	9	9	9	14	-	1.82	2.34	2.34	2.34	3.66	-	12.5 (3.5-14.0)	3.64 (0.8-4.84)	3.43
	7	9	9	9	18	-	1.68	2.16	2.16	2.16	4.34	-	12.5 (3.5-14.0)	3.61 (0.8-4.84)	3.46
	7	9	9	9	24	-	1.51	1.94	1.94	1.94	5.17	-	12.5 (3.5-14.0)	3.57 (0.8-4.84)	3.50
	7	9	9	12	12	-	1.78	2.30	2.30	3.06	3.06	-	12.5 (3.5-14.0)	3.63 (0.8-4.84)	3.44
	7	9	9	12	14	-	1.72	2.21	2.21	2.94	3.42	-	12.5 (3.5-14.0)	3.62 (0.8-4.84)	3.45
	7	9	9	12	18	-	1.59	2.05	2.05	2.73	4.08	-	12.5 (3.5-14.0)	3.59 (0.8-4.84)	3.48
	7	9	9	12	24	-	1.43	1.84	1.84	2.46	4.93	-	12.5 (3.5-14.0)	3.56 (0.8-4.84)	3.51
	7	9	9	14	14

REFRIGERANT R410A

6-unit Multi-split Combination Table–Cooling/Heating

6-unit Multi-split cooling

AOYG45LBLA6	Combination of Indoor Units						Cooling Operation								
							Cooling Capacity							Input Power (Min. - Max.)	EER
							Unit 1	Unit 2	Unit 3	Unit 4	Unit 5	Unit 6	Total Capacity (Min. - Max.)		
							kW	kW	kW	kW	kW	kW	kW	kW	
5-unit connection	7	9	12	14	18	-	1.46	1.88	2.50	2.92	3.74	-	12.5 (3.5-14.0)	3.56 (0.8-4.84)	3.51
	7	9	14	14	14	-	1.50	1.94	3.02	3.02	3.02	-	12.5 (3.5-14.0)	3.57 (0.8-4.84)	3.50
	7	9	14	14	18	-	1.41	1.81	2.82	2.82	3.64	-	12.5 (3.5-14.0)	3.55 (0.8-4.84)	3.52
	7	12	12	12	12	-	1.58	2.73	2.73	2.73	2.73	-	12.5 (3.5-14.0)	3.59 (0.8-4.84)	3.48
	7	12	12	12	14	-	1.54	2.63	2.63	2.63	3.07	-	12.5 (3.5-14.0)	3.58 (0.8-4.84)	3.49
	7	12	12	12	18	-	1.43	2.46	2.46	2.46	3.69	-	12.5 (3.5-14.0)	3.56 (0.8-4.84)	3.51
	7	12	12	14	14	-	1.48	2.54	2.54	2.97	2.97	-	12.5 (3.5-14.0)	3.57 (0.8-4.84)	3.50
	7	12	14	14	14	-	1.43	2.46	2.87	2.87	2.87	-	12.5 (3.5-14.0)	3.56 (0.8-4.84)	3.51
	9	9	9	9	9	-	2.50	2.50	2.50	2.50	2.50	-	12.5 (3.5-14.0)	3.65 (0.8-4.84)	3.42
	9	9	9	9	12	-	2.34	2.34	2.34	2.34	3.14	-	12.5 (3.5-14.0)	3.64 (0.8-4.84)	3.43
	9	9	9	9	14	-	2.25	2.25	2.25	2.25	3.50	-	12.5 (3.5-14.0)	3.62 (0.8-4.84)	3.45
	9	9	9	9	18	-	2.08	2.08	2.08	2.08	4.18	-	12.5 (3.5-14.0)	3.60 (0.8-4.84)	3.47
	9	9	9	9	24	-	1.88	1.88	1.88	1.88	4.98	-	12.5 (3.5-14.0)	3.56 (0.8-4.84)	3.51
	9	9	9	12	12	-	2.21	2.21	2.21	2.94	2.94	-	12.5 (3.5-14.0)	3.62 (0.8-4.84)	3.45
	9	9	9	12	14	-	2.12	2.12	2.12	2.83	3.31	-	12.5 (3.5-14.0)	3.60 (0.8-4.84)	3.47
	9	9	9	12	18	-	1.97	1.97	1.97	2.63	3.96	-	12.5 (3.5-14.0)	3.58 (0.8-4.84)	3.49
	9	9	9	14	14	-	2.05	2.05	2.05	3.18	3.18	-	12.5 (3.5-14.0)	3.59 (0.8-4.84)	3.48
	9	9	9	14	18	-	1.91	1.91	1.91	2.97	3.80	-	12.5 (3.5-14.0)	3.57 (0.8-4.84)	3.50
	9	9	12	12	12	-	2.08	2.08	2.78	2.78	2.78	-	12.5 (3.5-14.0)	3.60 (0.8-4.84)	3.47
	9	9	12	12	14	-	2.01	2.01	2.68	2.68	3.12	-	12.5 (3.5-14.0)	3.59 (0.8-4.84)	3.48
	9	9	12	12	18	-	1.88	1.88	2.50	2.50	3.74	-	12.5 (3.5-14.0)	3.56 (0.8-4.84)	3.51
	9	9	12	14	14	-	1.94	1.94	2.58	3.02	3.02	-	12.5 (3.5-14.0)	3.57 (0.8-4.84)	3.50
	9	9	12	14	18	-	1.81	1.81	2.42	2.82	3.64	-	12.5 (3.5-14.0)	3.55 (0.8-4.84)	3.52
	9	9	14	14	14	-	1.87	1.87	2.92	2.92	2.92	-	12.5 (3.5-14.0)	3.56 (0.8-4.84)	3.51
	9	12	12	12	12	-	1.98	2.63	2.63	2.63	2.63	-	12.5 (3.5-14.0)	3.58 (0.8-4.84)	3.49
	9	12	12	12	14	-	1.91	2.54	2.54	2.54	2.97	-	12.5 (3.5-14.0)	3.57 (0.8-4.84)	3.50
	9	12	12	14	14	-	1.84	2.46	2.46	2.87	2.87	-	12.5 (3.5-14.0)	3.56 (0.8-4.84)	3.51
	12	12	12	12	12	-	2.50	2.50	2.50	2.50	2.50	-	12.5 (3.5-14.0)	3.56 (0.8-4.84)	3.51
	12	12	12	12	14	-	2.42	2.42	2.42	2.42	2.82	-	12.5 (3.5-14.0)	3.55 (0.8-4.84)	3.52
6-unit connection	7	7	7	7	7	7	2.00	2.00	2.00	2.00	2.00	2.00	12.0 (3.5-13.4)	3.32 (0.8-4.46)	3.61
	7	7	7	7	7	9	2.00	2.00	2.00	2.00	2.00	2.50	12.5 (3.5-14.0)	3.57 (0.8-4.84)	3.50
	7	7	7	7	7	12	1.86	1.86	1.86	1.86	1.86	3.20	12.5 (3.5-14.0)	3.55 (0.8-4.84)	3.52
	7	7	7	7	7	14	1.79	1.79	1.79	1.79	1.79	3.55	12.5 (3.5-14.0)	3.54 (0.8-4.84)	3.53
	7	7	7	7	7	18	1.65	1.65	1.65	1.65	1.65	4.25	12.5 (3.5-14.0)	3.51 (0.8-4.84)	3.56
	7	7	7	7	7	24	1.48	1.48	1.48	1.48	1.48	5.10	12.5 (3.5-14.0)	3.48 (0.8-4.84)	3.59
	7	7	7	7	9	9	1.90	1.90	1.90	1.90	2.45	2.45	12.5 (3.5-14.0)	3.56 (0.8-4.84)	3.51
	7	7	7	7	9	12	1.79	1.79	1.79	1.79	2.29	3.05	12.5 (3.5-14.0)	3.54 (0.8-4.84)	3.53
	7	7	7	7	9	14	1.72	1.72	1.72	1.72	2.20	3.42	12.5 (3.5-14.0)	3.53 (0.8-4.84)	3.54
	7	7	7	7	9	18	1.59	1.59	1.59	1.59	2.05	4.09	12.5 (3.5-14.0)	3.50 (0.8-4.84)	3.57
	7	7	7	7	9	24	1.43	1.43	1.43	1.43	1.85	4.93	12.5 (3.5-14.0)	3.47 (0.8-4.84)	3.60
	7	7	7	7	12	12	1.68	1.68	1.68	1.68	2.89	2.89	12.5 (3.5-14.0)	3.52 (0.8-4.84)	3.55
	7	7	7	7	12	14	1.62	1.62	1.62	1.62	2.78	3.24	12.5 (3.5-14.0)	3.51 (0.8-4.84)	3.56
	7	7	7	7	12	18	1.51	1.51	1.51	1.51	2.59	3.87	12.5 (3.5-14.0)	3.48 (0.8-4.84)	3.59
	7	7	7	7	14	14	1.56	1.56	1.56	1.56	3.13	3.13	12.5 (3.5-14.0)	3.50 (0.8-4.84)	3.57
	7	7	7	7	14	18	1.46	1.46	1.46	1.46	2.92	3.74	12.5 (3.5-14.0)	3.47 (0.8-4.84)	3.60
	7	7	7	9	9	9	1.82	1.82	1.82	2.34	2.34	2.34	12.5 (3.5-14.0)	3.55 (0.8-4.84)	3.52
	7	7	7	9	9	12	1.72	1.72	1.72	2.21	2.21	2.92	12.5 (3.5-14.0)	3.53 (0.8-4.84)	3.54
	7	7	7	9	9	14	1.65	1.65	1.65	2.12	2.12	3.31	12.5 (3.5-14.0)	3.51 (0.8-4.84)	3.56
	7	7	7	9	9	18	1.54	1.54	1.54	1.97	1.97	3.94	12.5 (3.5-14.0)	3.49 (0.8-4.84)	3.58
	7	7	7	9	12	12	1.62	1.62	1.62	2.08	2.78	2.78	12.5 (3.5-14.0)	3.51 (0.8-4.84)	3.56
	7	7	7	9	12	14	1.56	1.56	1.56	2.01	2.68	3.13	12.5 (3.5-14.0)	3.50 (0.8-4.84)	3.57
	7	7	7	9	12	18	1.46	1.46	1.46	1.88	2.50	3.74	12.5 (3.5-14.0)	3.47 (0.8-4.84)	3.60
	7	7	7	9	14	14	1.51	1.51	1.51	1.93	3.02	3.02	12.5 (3.5-14.0)	3.48 (0.8-4.84)	3.59
	7	7	7	12	12	12	1.54	1.54	1.54	2.63	2.63	2.63	12.5 (3.5-14.0)	3.49 (0.8-4.84)	3.58
	7	7	7	12	12	14	1.48	1.48	1.48	2.54	2.54	2.98	12.5 (3.5-14.0)	3.48 (0.8-4.84)	3.59
	7	7	7	12	14	14	1.43	1.43	1.43	2.47	2.87	2.87	12.5 (3.5-14.0)	3.47 (0.8-4.84)	3.60
	7	7	9	9	9	9	1.75	1.75	2.25	2.25	2.25	2.25	12.5 (3.5-14.0)	3.53 (0.8-4.84)	3.54
	7	7	9	9	9	12	1.65	1.65	2.12	2.12	2.12	2.84	12.5 (3.5-14.0)	3.51 (0.8-4.84)	3.56
	7	7	9	9	9	14	1.59	1.59	2.05	2.05	2.05	3.17	12.5 (3.5-14.0)	3.50 (0.8-4.84)	3.57
	7	7	9	9	9	18	1.48	1.48	1.91	1.91	1.91	3.81	12.5 (3.5-14.0)	3.48 (0.8-4.84)	3.59
	7	7	9	9	12	12	1.56	1.56	2.01	2.01	2.68	2.68	12.5 (3.5-14.0)	3.50 (0.8-4.84)	3.57
	7	7	9	9	12	14	1.51	1.51	1.94	1.94	2.59	3.01	12.5 (3.5-14.0)	3.48 (0.8-4.84)	3.59
	7	7	9	9	12	18	1.41	1.41	1.81	1.81	2.42	3.64	12.5 (3.5-14.0)	3.46 (0.8-4.84)	3.61
	7	7	9	9	14	14	1.46	1.46	1.88	1.88	2.91	2.91	12.5 (3.5-14.0)	3.47 (0.8-4.84)	3.60
	7	7	9	12	12	12	1.48	1.48	1.92	2.54	2.54	2.54	12.5 (3.5-14.0)	3.48 (0.8-4.84)	3.59
	7	7	9	12	12	14	1.43	1.43	1.85	2.46	2.46	2.87	12.5 (3.5-14.0)	3.47 (0.8-4.84)	3.60
	7	7	12	12	12	12	1.41	1.41	2.42	2.42	2.42	2.42	12.5 (3.5-14.0)	3.46 (0.8-4.84)	3.61
	7	9	9	9	9	9	1.70	2.16	2.16	2.16	2.16	2.16	12.5 (3.5-14.0)	3.52 (0.8-4.84)	3.55
	7	9	9	9	9	12	1.59	2.05	2.05	2.05	2.05	2.71	12.5 (3.5-14.0)	3.50 (0.8-4.84)	3.57
	7	9	9	9	9	14	1.54	1.97	1.97	1.97	1.97	3.08	12.5 (3.5-14.0)	3.49 (0.8-4.84)	3.58
	7	9	9	9	12	12	1.50	1.94	1.94	1.94	2.59	2.59	12.5 (3.5-14.0)	3.48 (0.8-4.84)	3.59
	7	9	9	9	12	14	1.46	1.88	1.88	1.88	2.50	2.90	12.5 (3.5-14.0)	3.47 (0.8-4.84)	3.60
	7	9	9	12	12	12	1.44	1.84	1.84	2.46	2.46	2.46	12.5 (3.5-14.0)	3.47 (0.8-4.84)	3.60
	9	9	9	9	9	9	2.08	2.08	2.08	2.08	2.08	2.08	12.5 (3.5-14.0)	3.51 (0.8-4.84)	3.56
	9	9	9	9	9	12	1.97	1.97	1.97	1.97	1.97	2.65	12.5 (3.5-14.0)	3.49 (0.8-4.84)	3.58
	9	9	9	9	12	12	1.88	1.88	1.88	1.88	2.49	2.49	12.5 (3.5-14.0)	3.47 (0.8-4.84)	3.60

Notes:
- 7: 7000 Btu/h/9: 9000 Btu/h/12: 12000 Btu/h/14: 14000 Btu/h/18: 18000 Btu/h/24: 24000 Btu/h models
- The above specifications apply when connected with a wall-mounted unit.
- 2 or more indoor units should be connected.
- Cooling capacity is determined based on 27°CDB/19°CWB (indoor temperature) and 35°CDB (outdoor temperature).
- Pipe Length: 5 m, Height difference: 0 m (Outdoor unit to Indoor unit)
- Total capacity of indoor units connected must be between 9.5 kW and 18.0 kW.

6-unit Multi-split heating

AOYG45LBLA6	Combination of Indoor Units						Heating Operation								
							Heating Capacity							Input Power (Min. - Max.)	COP
							Unit 1	Unit 2	Unit 3	Unit 4	Unit 5	Unit 6	Total Capacity (Min. - Max.)		
							kW	kW	kW	kW	kW	kW	kW	kW	
2-unit connection	12	24	-	-	-	-	4.07	8.13	-	-	-	-	12.2 (3.5-13.1)	3.41 (0.7-3.54)	3.58
	14	24	-	-	-	-	4.61	7.89	-	-	-	-	12.5 (3.5-13.8)	3.56 (0.7-3.76)	3.51
	18	18	-	-	-	-	6.10	6.10	-	-	-	-	12.2 (3.5-13.1)	3.41 (0.7-3.54)	3.58
	18	24	-	-	-	-	5.66	7.54	-	-	-	-	13.2 (3.5-15.3)	3.78 (0.7-4.20)	3.49
	24	24	-	-	-	-	6.75	6.75	-	-	-	-	13.5 (3.5-16.0)	3.89 (0.7-4.41)	3.47
3-unit connection	7	7	24	-	-	-	2.30	2.30	7.90	-	-	-	12.5 (3.5-13.8)	3.43 (0.7-3.76)	3.64
	7	9	18	-	-	-	2.35	3.02	6.03	-	-	-	11.4 (3.5-12.4)	2.98 (0.7-3.33)	3.83
	7	9	24	-	-	-	2.24	2.88	7.68	-	-	-	12.8 (3.5-14.5)	3.54 (0.7-3.98)	3.62
	7	12	18	-	-	-	2.33	3.99	5.98	-	-	-	12.3 (3.5-13.5)	3.35 (0.7-3.65)	3.67
	7	12	24	-	-	-	2.17	3.71	7.42	-	-	-	13.3 (3.5-15.6)	3.69 (0.7-4.30)	3.60
	7	14	14	-	-	-	2.40	4.80	4.80	-	-	-	12.0 (3.5-12.7)	3.15 (0.7-3.44)	3.81
	7	14	18	-	-	-	2.28	4.56	5.86	-	-	-	12.7 (3.5-14.2)	3.49 (0.7-3.87)	3.64
	7	14	24	-	-	-	2.10	4.20	7.20	-	-	-	13.5 (3.5-16.0)	3.75 (0.7-4.41)	3.60
	7	18	18	-	-	-	2.16	5.57	5.57	-	-	-	13.3 (3.5-15.6)	3.69 (0.7-4.30)	3.60
	7	18	24	-	-	-	1.93	4.96	6.61	-	-	-	13.5 (3.5-16.0)	3.74 (0.7-4.41)	3.61
	7	24	24	-	-	-	1.72	5.89	5.89	-	-	-	13.5 (3.5-16.0)	3.72 (0.7-4.41)	3.63
	9	9	18	-	-	-	3.05	3.05	6.10	-	-	-	12.2 (3.5-13.1)	3.28 (0.7-3.54)	3.72
	9	9	24	-	-	-	2.83	2.83	7.54	-	-	-	13.2 (3.5-15.3)	3.64 (0.7-4.20)	3.63
	9	12	14	-	-	-	3.09	4.11	4.80	-	-	-	12.0 (3.5-12.7)	3.15 (0.7-3.44)	3.81
	9	12	18	-	-	-	2.93	3.91	5.86	-	-	-	12.7 (3.5-14.2)	3.49 (0.7-3.87)	3.64
	9	12	24	-	-	-	2.70	3.60	7.20	-	-	-	13.5 (3.5-16.0)	3.75 (0.7-4.41)	3.60
	9	14	14	-	-	-	3.00	4.65	4.65	-	-	-	12.3 (3.5-13.5)	3.35 (0.7-3.65)	3.67
	9	14	18	-	-	-	2.85	4.44	5.71	-	-	-	13.0 (3.5-14.9)	3.59 (0.7-4.09)	3.62
	9	14	24	-	-	-	2.59	4.02	6.89	-	-	-	13.5 (3.5-16.0)	3.74 (0.7-4.41)	3.61
	9	18	18	-	-	-	2.70	5.40	5.40	-	-	-	13.5 (3.5-16.0)	3.75 (0.7-4.41)	3.60
	9	18	24	-	-	-	2.38	4.76	6.36	-	-	-	13.5 (3.5-16.0)	3.73 (0.7-4.41)	3.62
	9	24	24	-	-	-	2.14	5.68	5.68	-	-	-	13.5 (3.5-16.0)	3.71 (0.7-4.41)	3.64
	12	12	12	-	-	-	4.07	4.07	4.07	-	-	-	12.2 (3.5-13.1)	3.28 (0.7-3.54)	3.72
	12	12	14	-	-	-	3.94	3.95	4.61	-	-	-	12.5 (3.5-13.8)	3.43 (0.7-3.76)	3.64
	12	12	18	-	-	-	3.77	3.77	5.66	-	-	-	13.2 (3.5-15.3)	3.64 (0.7-4.20)	3.63
	12	12	24	-	-	-	3.38	3.38	6.74	-	-	-	13.5 (3.5-16.0)	3.74 (0.7-4.41)	3.61
	12	14	14	-	-	-	3.84	4.48	4.48	-	-	-	12.8 (3.5-14.5)	3.54 (0.7-3.98)	3.62
	12	14	18	-	-	-	3.68	4.30	5.52	-	-	-	13.5 (3.5-16.0)	3.75 (0.7-4.41)	3.60
	12	14	24	-	-	-	3.24	3.78	6.48	-	-	-	13.5 (3.5-16.0)	3.74 (0.7-4.41)	3.61
	12	18	18	-	-	-	3.38	5.06	5.06	-	-	-	13.5 (3.5-16.0)	3.74 (0.7-4.41)	3.61
	12	18	24	-	-	-	3.00	4.50	6.00	-	-	-	13.5 (3.5-16.0)	3.72 (0.7-4.41)	3.63
	12	24	24	-	-	-	2.70	5.40	5.40	-	-	-	13.5 (3.5-16.0)	3.71 (0.7-4.41)	3.64
	14	14	14	-	-	-	4.40	4.40	4.40	-	-	-	13.2 (3.5-15.3)	3.64 (0.7-4.20)	3.63
	14	14	18	-	-	-	4.11	4.11	5.28	-	-	-	13.5 (3.5-16.0)	3.75 (0.7-4.41)	3.60
	14	14	24	-	-	-	3.63	3.63	6.24	-	-	-	13.5 (3.5-16.0)	3.73 (0.7-4.41)	3.62
	14	18	18	-	-	-	3.78	4.86	4.86	-	-	-	13.5 (3.5-16.0)	3.74 (0.7-4.41)	3.61
	14	18	24	-	-	-	3.38	4.34	5.78	-	-	-	13.5 (3.5-16.0)	3.72 (0.7-4.41)	3.63
	14	24	24	-	-	-	3.04	5.23	5.23	-	-	-	13.5 (3.5-16.0)	3.70 (0.7-4.41)	3.65
	18	18	18	-	-	-	4.50	4.50	4.50	-	-	-	13.5 (3.5-16.0)	3.72 (0.7-4.41)	3.63
	18	18	24	-	-	-	4.05	4.05	5.40	-	-	-	13.5 (3.5-16.0)	3.71 (0.7-4.41)	3.64
4-unit connection	7	7	7	14	-	-	2.40	2.40	2.40	4.80	-	-	12.0 (3.5-12.7)	2.98 (0.7-3.44)	4.03
	7	7	7	18	-	-	2.28	2.28	2.28	5.86	-	-	12.7 (3.5-14.2)	3.35 (0.7-3.87)	3.79
	7	7	7	24	-	-	2.10	2.10	2.10	7.20	-	-	13.5 (3.5-16.0)	3.61 (0.7-4.41)	3.74
	7	7	9	12	-	-	2.40	2.40	3.09	4.11	-	-	12.0 (3.5-12.7)	2.98 (0.7-3.44)	4.03
	7	7	9	14	-	-	2.33	2.33	2.99	4.65	-	-	12.3 (3.5-13.5)	3.19 (0.7-3.65)	3.86
	7	7	9	18	-	-	2.22	2.22	2.85	5.71	-	-	13.0 (3.5-14.9)	3.46 (0.7-4.09)	3.76
	7	7	9	24	-	-	2.01	2.01	2.59	6.89	-	-	13.5 (3.5-16.0)	3.60 (0.7-4.41)	3.75
	7	7	12	12	-	-	2.30	2.30	3.95	3.95	-	-	12.5 (3.5-13.8)	3.28 (0.7-3.76)	3.81
	7	7	12	14	-	-	2.24	2.24	3.84	4.48	-	-	12.8 (3.5-14.5)	3.41 (0.7-3.98)	3.75
	7	7	12	18	-	-	2.15	2.15	3.68	5.52	-	-	13.5 (3.5-16.0)	3.61 (0.7-4.41)	3.74
	7	7	12	24	-	-	1.89	1.89	3.24	6.48	-	-	13.5 (3.5-16.0)	3.60 (0.7-4.41)	3.75
	7	7	14	14	-	-	2.20	2.20	4.40	4.40	-	-	13.2 (3.5-15.3)	3.52 (0.7-4.20)	3.75
	7	7	14	18	-	-	2.05	2.05	4.11	5.29	-	-	13.5 (3.5-16.0)	3.61 (0.7-4.41)	3.74
	7	7	14	24	-	-	1.82	1.82	3.63	6.23	-	-	13.5 (3.5-16.0)	3.59 (0.7-4.41)	3.76
	7	7	18	18	-	-	1.89	1.89	4.86	4.86	-	-	13.5 (3.5-16.0)	3.60 (0.7-4.41)	3.75
	7	7	18	24	-	-	1.69	1.69	4.34	5.78	-	-	13.5 (3.5-16.0)	3.58 (0.7-4.41)	3.77
	7	7	24	24	-	-	1.52	1.52	5.23	5.23	-	-	13.5 (3.5-16.0)	3.56 (0.7-4.41)	3.79
	7	9	9	9	-	-	2.34	3.02	3.02	3.02	-	-	11.4 (3.5-12.4)	2.82 (0.7-3.33)	4.04
	7	9	9	12	-	-	2.33	2.99	2.99	3.99	-	-	12.3 (3.5-13.5)	3.19 (0.7-3.65)	3.86
	7	9	9	14	-	-	2.28	2.93	2.93	4.56	-	-	12.7 (3.5-14.2)	3.35 (0.7-3.87)	3.79
	7	9	9	18	-	-	2.17	2.78	2.78	5.57	-	-	13.3 (3.5-15.6)	3.56 (0.7-4.30)	3.74
	7	9	9	24	-	-	1.93	2.48	2.48	6.61	-	-	13.5 (3.5-16.0)	3.60 (0.7-4.41)	3.75
	7	9	12	12	-	-	2.24	2.88	3.84	3.84	-	-	12.8 (3.5-14.5)	3.41 (0.7-3.98)	3.75
	7	9	12	14	-	-	2.20	2.83	3.77	4.40	-	-	13.2 (3.5-15.3)	3.52 (0.7-4.20)	3.75
	7	9	12	18	-	-	2.05	2.64	3.52	5.29	-	-	13.5 (3.5-16.0)	3.61 (0.7-4.41)	3.74
	7	9	12	24	-	-	1.82	2.34	3.12	6.22	-	-	13.5 (3.5-16.0)	3.59 (0.7-4.41)	3.76
	7	9	14	14	-	-	2.15	2.75	4.30	4.30	-	-	13.5 (3.5-16.0)	3.61 (0.7-4.41)	3.74
	7	9	14	18	-	-	1.97	2.53	3.94	5.06	-	-	13.5 (3.5-16.0)	3.60 (0.7-4.41)	3.75
	7	9	14	24	-	-	1.75	2.25	3.50	6.00	-	-	13.5 (3.5-16.0)	3.58 (0.7-4.41)	3.77
	7	9	18	18	-	-	1.82	2.34	4.67	4.67	-	-	13.5 (3.5-16.0)	3.59 (0.7-4.41)	3.76
	7	9	18	24	-	-	1.63	2.09	4.19	5.59	-	-	13.5 (3.5-16.0)	3.57 (0.7-4.41)	3.78
	7	12	12	12	-	-	2.17	3.71	3.71	3.71	-	-	13.3 (3.5-15.6)	3.56 (0.7-4.30)	3.74
	7	12	12	14	-	-	2.10	3.60	3.60	4.20	-	-	13.5 (3.5-16.0)	3.61 (0.7-4.41)	3.74
	7	12	12	18	-	-	1.93	3.31	3.31	4.95	-	-	13.5 (3.5-16.0)	3.60 (0.7-4.41)	3.75
	7	12	12	24	-	-	1.72	2.95	2.95	5.88	-	-	13.5 (3.5-16.0)	3.58 (0.7-4.41)	3.77
	7	12	14	14	-	-	2.01	3.45	4.02	4.02	-	-	13.5 (3.5-16.0)	3.60 (0.7-4.41)	3.75
	7	12	14	18	-	-	1.85	3.18	3.71	4.76	-	-	13.5 (3.5-16.0)	3.59 (0.7-4.41)	3.76
	7	12	14	24	-	-	1.66	2.84	3.32	5.68	-	-	13.5 (3.5-16.0)	3.57 (0.7-4.41)	3.78
	7	12	18	18	-	-	1.72	2.94	4.42	4.42	-	-	13.5 (3.5-16.0)	3.58 (0.7-4.41)	3.77
	7	12	18	24	-	-	1.55	2.66	3.98	5.31	-	-	13.5 (3.5-16.0)	3.56 (0.7-4.41)	3.79
	7	14	14	14	-	-	1.92	3.86	3.86	3.86	-	-	13.5 (3.5-16.0)	3.60 (0.7-4.41)	3.75
	7	14	14	18	-	-	1.78	3.57	3.57	4.58	-	-	13.5 (3.5-16.0)	3.59 (0.7-4.41)	3.76
	7	14	14	24	-	-	1.60	3.20	3.20	5.50	-	-	13.5 (3.5-16.0)	3.57 (0.7-4.41)	3.78
	7	14	18	18	-	-	1.66	3.32	4.26	4.26	-	-	13.5 (3.5-16.0)	3.57 (0.7-4.41)	3.78
	7	18	18	18	-	-	1.56	3.98	3.98	3.98	-	-	13.5 (3.5-16.0)	3.56 (0.7-4.41)	3.79
	9	9	9	9	-	-	3.05	3.05	3.05	3.05	-	-	12.2 (3.5-13.1)	3.09 (0.7-3.54)	3.95
	9	9	9	12	-	-	2.93	2.93	2.93	3.91	-	-	12.7 (3.5-14.2)	3.35 (0.7-3.87)	3.79

6-unit Multi-split Combination Table–Heating

6-unit Multi-split heating

AOYG45LBLA6	Combination of Indoor Units						Heating Operation								
							Heating Capacity							Input Power (Min. - Max.)	COP
							Unit 1	Unit 2	Unit 3	Unit 4	Unit 5	Unit 6	Total Capacity (Min. - Max.)		
							kW	kW	kW	kW	kW	kW	kW	kW	
4-unit connection	9	9	9	14	-	-	2.85	2.85	2.85	4.45	-	-	13.0 (3.5-14.9)	3.46 (0.7-4.09)	3.76
	9	9	9	18	-	-	2.70	2.70	2.70	5.40	-	-	13.5 (3.5-16.0)	3.61 (0.7-4.41)	3.74
	9	9	9	24	-	-	2.38	2.38	2.38	6.36	-	-	13.5 (3.5-16.0)	3.59 (0.7-4.41)	3.76
	9	9	12	12	-	-	2.83	2.83	3.77	3.77	-	-	13.2 (3.5-15.3)	3.52 (0.7-4.20)	3.75
	9	9	12	14	-	-	2.76	2.76	3.68	4.30	-	-	13.5 (3.5-16.0)	3.61 (0.7-4.41)	3.74
	9	9	12	18	-	-	2.53	2.53	3.38	5.06	-	-	13.5 (3.5-16.0)	3.60 (0.7-4.41)	3.75
	9	9	12	24	-	-	2.25	2.25	3.00	6.00	-	-	13.5 (3.5-16.0)	3.58 (0.7-4.41)	3.77
	9	9	14	14	-	-	2.64	2.64	4.11	4.11	-	-	13.5 (3.5-16.0)	3.61 (0.7-4.41)	3.74
	9	9	14	18	-	-	2.43	2.43	3.78	4.86	-	-	13.5 (3.5-16.0)	3.60 (0.7-4.41)	3.75
	9	9	14	24	-	-	2.17	2.17	3.38	5.78	-	-	13.5 (3.5-16.0)	3.58 (0.7-4.41)	3.77
	9	9	18	18	-	-	2.25	2.25	4.50	4.50	-	-	13.5 (3.5-16.0)	3.58 (0.7-4.41)	3.77
	9	9	18	24	-	-	2.03	2.03	4.05	5.39	-	-	13.5 (3.5-16.0)	3.57 (0.7-4.41)	3.78
	9	12	12	12	-	-	2.70	3.60	3.60	3.60	-	-	13.5 (3.5-16.0)	3.61 (0.7-4.41)	3.74
	9	12	12	14	-	-	2.59	3.45	3.45	4.01	-	-	13.5 (3.5-16.0)	3.60 (0.7-4.41)	3.75
	9	12	12	18	-	-	2.38	3.18	3.18	4.76	-	-	13.5 (3.5-16.0)	3.59 (0.7-4.41)	3.76
	9	12	12	24	-	-	2.13	2.84	2.84	5.69	-	-	13.5 (3.5-16.0)	3.57 (0.7-4.41)	3.78
	9	12	14	14	-	-	2.48	3.30	3.86	3.86	-	-	13.5 (3.5-16.0)	3.60 (0.7-4.41)	3.75
	9	12	14	18	-	-	2.29	3.06	3.57	4.58	-	-	13.5 (3.5-16.0)	3.59 (0.7-4.41)	3.76
	9	12	14	24	-	-	2.06	2.75	3.20	5.49	-	-	13.5 (3.5-16.0)	3.57 (0.7-4.41)	3.78
	9	12	18	18	-	-	2.13	2.85	4.26	4.26	-	-	13.5 (3.5-16.0)	3.57 (0.7-4.41)	3.78
	9	14	14	14	-	-	2.37	3.71	3.71	3.71	-	-	13.5 (3.5-16.0)	3.59 (0.7-4.41)	3.76
	9	14	14	18	-	-	2.21	3.44	3.44	4.41	-	-	13.5 (3.5-16.0)	3.58 (0.7-4.41)	3.77
	9	14	14	24	-	-	1.99	3.10	3.10	5.31	-	-	13.5 (3.5-16.0)	3.56 (0.7-4.41)	3.79
	9	14	18	18	-	-	2.06	3.20	4.12	4.12	-	-	13.5 (3.5-16.0)	3.57 (0.7-4.41)	3.78
	12	12	12	12	-	-	3.38	3.38	3.38	3.38	-	-	13.5 (3.5-16.0)	3.60 (0.7-4.41)	3.75
	12	12	12	14	-	-	3.24	3.24	3.24	3.78	-	-	13.5 (3.5-16.0)	3.60 (0.7-4.41)	3.75
	12	12	12	18	-	-	3.00	3.00	3.00	4.50	-	-	13.5 (3.5-16.0)	3.58 (0.7-4.41)	3.77
	12	12	12	24	-	-	2.70	2.70	2.70	5.40	-	-	13.5 (3.5-16.0)	3.57 (0.7-4.41)	3.78
	12	12	14	14	-	-	3.12	3.12	3.63	3.63	-	-	13.5 (3.5-16.0)	3.59 (0.7-4.41)	3.76
	12	12	14	18	-	-	2.89	2.89	3.38	4.34	-	-	13.5 (3.5-16.0)	3.58 (0.7-4.41)	3.77
	12	12	14	24	-	-	2.61	2.61	3.05	5.23	-	-	13.5 (3.5-16.0)	3.56 (0.7-4.41)	3.79
	12	12	18	18	-	-	2.70	2.70	4.05	4.05	-	-	13.5 (3.5-16.0)	3.57 (0.7-4.41)	3.78
	12	14	14	14	-	-	3.00	3.50	3.50	3.50	-	-	13.5 (3.5-16.0)	3.58 (0.7-4.41)	3.77
	12	14	14	18	-	-	2.79	3.26	3.26	4.19	-	-	13.5 (3.5-16.0)	3.57 (0.7-4.41)	3.78
	12	14	18	18	-	-	2.61	3.05	3.92	3.92	-	-	13.5 (3.5-16.0)	3.56 (0.7-4.41)	3.79
5-unit connection	7	7	7	7	7	-	2.40	2.40	2.40	2.40	2.40	-	12.0 (3.5-12.7)	2.82 (0.7-3.44)	4.26
	7	7	7	7	9	-	2.33	2.33	2.33	2.33	2.98	-	12.3 (3.5-13.5)	3.03 (0.7-3.65)	4.06
	7	7	7	7	12	-	2.24	2.24	2.24	2.24	3.84	-	12.8 (3.5-14.5)	3.29 (0.7-3.98)	3.89
	7	7	7	7	14	-	2.20	2.20	2.20	2.20	4.40	-	13.2 (3.5-15.3)	3.40 (0.7-4.20)	3.88
	7	7	7	7	18	-	2.05	2.05	2.05	2.05	5.30	-	13.5 (3.5-16.0)	3.49 (0.7-4.41)	3.87
	7	7	7	7	24	-	1.82	1.82	1.82	1.82	6.22	-	13.5 (3.5-16.0)	3.47 (0.7-4.41)	3.89
	7	7	7	9	9	-	2.28	2.28	2.28	2.93	2.93	-	12.7 (3.5-14.2)	3.23 (0.7-3.87)	3.93
	7	7	7	9	12	-	2.20	2.20	2.20	2.83	3.77	-	13.2 (3.5-15.3)	3.40 (0.7-4.20)	3.88
	7	7	7	9	14	-	2.15	2.15	2.15	2.76	4.29	-	13.5 (3.5-16.0)	3.49 (0.7-4.41)	3.87
	7	7	7	9	18	-	1.97	1.97	1.97	2.53	5.06	-	13.5 (3.5-16.0)	3.48 (0.7-4.41)	3.88
	7	7	7	9	24	-	1.75	1.75	1.75	2.25	6.00	-	13.5 (3.5-16.0)	3.46 (0.7-4.41)	3.90
	7	7	7	12	12	-	2.10	2.10	2.10	3.60	3.60	-	13.5 (3.5-16.0)	3.49 (0.7-4.41)	3.87
	7	7	7	12	14	-	2.01	2.01	2.01	3.45	4.02	-	13.5 (3.5-16.0)	3.48 (0.7-4.41)	3.88
	7	7	7	12	18	-	1.85	1.85	1.85	3.18	4.77	-	13.5 (3.5-16.0)	3.47 (0.7-4.41)	3.89
	7	7	7	12	24	-	1.66	1.66	1.66	2.84	5.68	-	13.5 (3.5-16.0)	3.45 (0.7-4.41)	3.91
	7	7	7	14	14	-	1.93	1.93	1.93	3.86	3.86	-	13.5 (3.5-16.0)	3.48 (0.7-4.41)	3.88
	7	7	7	14	18	-	1.78	1.78	1.78	3.57	4.59	-	13.5 (3.5-16.0)	3.47 (0.7-4.41)	3.89
	7	7	7	14	24	-	1.60	1.60	1.60	3.20	5.50	-	13.5 (3.5-16.0)	3.45 (0.7-4.41)	3.91
	7	7	7	18	18	-	1.66	1.66	1.66	4.26	4.26	-	13.5 (3.5-16.0)	3.45 (0.7-4.41)	3.91
	7	7	9	9	9	-	2.22	2.22	2.85	2.85	2.85	-	13.0 (3.5-14.9)	3.34 (0.7-4.09)	3.89
	7	7	9	9	12	-	2.15	2.15	2.76	2.76	3.68	-	13.5 (3.5-16.0)	3.49 (0.7-4.41)	3.87
	7	7	9	9	14	-	2.05	2.05	2.64	2.64	4.12	-	13.5 (3.5-16.0)	3.49 (0.7-4.41)	3.87
	7	7	9	9	18	-	1.89	1.89	2.43	2.43	4.86	-	13.5 (3.5-16.0)	3.48 (0.7-4.41)	3.88
	7	7	9	9	24	-	1.69	1.69	2.17	2.17	5.78	-	13.5 (3.5-16.0)	3.46 (0.7-4.41)	3.90
	7	7	9	12	12	-	2.01	2.01	2.58	3.45	3.45	-	13.5 (3.5-16.0)	3.48 (0.7-4.41)	3.88
	7	7	9	12	14	-	1.93	1.93	2.48	3.31	3.85	-	13.5 (3.5-16.0)	3.48 (0.7-4.41)	3.88
	7	7	9	12	18	-	1.78	1.78	2.29	3.06	4.59	-	13.5 (3.5-16.0)	3.47 (0.7-4.41)	3.89
	7	7	9	12	24	-	1.60	1.60	2.06	2.75	5.49	-	13.5 (3.5-16.0)	3.45 (0.7-4.41)	3.91
	7	7	9	14	14	-	1.85	1.85	2.38	3.71	3.71	-	13.5 (3.5-16.0)	3.47 (0.7-4.41)	3.89
	7	7	9	14	18	-	1.72	1.72	2.21	3.44	4.41	-	13.5 (3.5-16.0)	3.46 (0.7-4.41)	3.90
	7	7	9	14	24	-	1.55	1.55	1.99	3.10	5.31	-	13.5 (3.5-16.0)	3.44 (0.7-4.41)	3.92
	7	7	9	18	18	-	1.60	1.60	2.06	4.12	4.12	-	13.5 (3.5-16.0)	3.45 (0.7-4.41)	3.91
	7	7	12	12	12	-	1.89	1.89	3.24	3.24	3.24	-	13.5 (3.5-16.0)	3.48 (0.7-4.41)	3.88
	7	7	12	12	14	-	1.82	1.82	3.12	3.12	3.62	-	13.5 (3.5-16.0)	3.47 (0.7-4.41)	3.89
	7	7	12	12	18	-	1.69	1.69	2.89	2.89	4.34	-	13.5 (3.5-16.0)	3.46 (0.7-4.41)	3.90
	7	7	12	12	24	-	1.52	1.52	2.61	2.61	5.24	-	13.5 (3.5-16.0)	3.44 (0.7-4.41)	3.92
	7	7	12	14	14	-	1.75	1.75	3.00	3.50	3.50	-	13.5 (3.5-16.0)	3.46 (0.7-4.41)	3.90
	7	7	12	14	18	-	1.63	1.63	2.79	3.26	4.19	-	13.5 (3.5-16.0)	3.45 (0.7-4.41)	3.91
	7	7	12	18	18	-	1.52	1.52	2.62	3.92	3.92	-	13.5 (3.5-16.0)	3.44 (0.7-4.41)	3.92
	7	7	14	14	14	-	1.68	1.68	3.38	3.38	3.38	-	13.5 (3.5-16.0)	3.46 (0.7-4.41)	3.90
	7	7	14	14	18	-	1.58	1.58	3.15	3.15	4.04	-	13.5 (3.5-16.0)	3.45 (0.7-4.41)	3.91
	7	9	9	9	9	-	2.18	2.78	2.78	2.78	2.78	-	13.3 (3.5-15.6)	3.44 (0.7-4.30)	3.87
	7	9	9	9	12	-	2.05	2.64	2.64	2.64	3.53	-	13.5 (3.5-16.0)	3.49 (0.7-4.41)	3.87
	7	9	9	9	14	-	1.97	2.53	2.53	2.53	3.94	-	13.5 (3.5-16.0)	3.48 (0.7-4.41)	3.88
	7	9	9	9	18	-	1.82	2.34	2.34	2.34	4.66	-	13.5 (3.5-16.0)	3.47 (0.7-4.41)	3.89
	7	9	9	9	24	-	1.63	2.09	2.09	2.09	5.60	-	13.5 (3.5-16.0)	3.45 (0.7-4.41)	3.91
	7	9	9	12	12	-	1.92	2.48	2.48	3.31	3.31	-	13.5 (3.5-16.0)	3.48 (0.7-4.41)	3.88
	7	9	9	12	14	-	1.85	2.38	2.38	3.18	3.71	-	13.5 (3.5-16.0)	3.47 (0.7-4.41)	3.89
	7	9	9	12	18	-	1.72	2.21	2.21	2.95	4.41	-	13.5 (3.5-16.0)	3.46 (0.7-4.41)	3.90
	7	9	9	12	24	-	1.55	1.99	1.99	2.66	5.31	-	13.5 (3.5-16.0)	3.44 (0.7-4.41)	3.92
	7	9	9	14	14	-	1.78	2.29	2.29	3.57	3.57	-	13.5 (3.5-16.0)	3.47 (0.7-4.41)	3.89
	7	9	9	14	18	-	1.66	2.13	2.13	3.32	4.26	-	13.5 (3.5-16.0)	3.45 (0.7-4.41)	3.91
	7	9	9	18	18	-	1.56	1.99	1.99	3.98	3.98	-	13.5 (3.5-16.0)	3.44 (0.7-4.41)	3.92
	7	9	12	12	12	-	1.82	2.32	3.12	3.12	3.12	-	13.5 (3.5-16.0)	3.47 (0.7-4.41)	3.89
	7	9	12	12	14	-	1.75	2.25	3.00	3.00	3.50	-	13.5 (3.5-16.0)	3.46 (0.7-4.41)	3.90
	7	9	12	12	18	-	1.63	2.09	2.79	2.79	4.20	-	13.5 (3.5-16.0)	3.45 (0.7-4.41)	3.91
	7	9	12	14	14	-	1.69	2.17	2.88	3.38	3.38	-	13.5 (3.5-16.0)	3.46 (0.7-4.41)	3.90

6-unit Multi-split heating

AOYG45LBLA6	Combination of Indoor Units						Heating Operation								
							Heating Capacity							Input Power (Min. - Max.)	COP
							Unit 1	Unit 2	Unit 3	Unit 4	Unit 5	Unit 6	Total Capacity (Min. - Max.)		
							kW	kW	kW	kW	kW	kW	kW	kW	
5-unit connection	7	9	12	14	18	-	1.58	2.03	2.70	3.15	4.04	-	13.5 (3.5-16.0)	3.45 (0.7-4.41)	3.91
	7	9	14	14	14	-	1.63	2.09	3.26	3.26	3.26	-	13.5 (3.5-16.0)	3.45 (0.7-4.41)	3.91
	7	9	14	14	18	-	1.52	1.96	3.05	3.05	3.92	-	13.5 (3.5-16.0)	3.44 (0.7-4.41)	3.92
	7	12	12	12	12	-	1.70	2.95	2.95	2.95	2.95	-	13.5 (3.5-16.0)	3.46 (0.7-4.41)	3.90
	7	12	12	12	14	-	1.66	2.84	2.84	2.84	3.32	-	13.5 (3.5-16.0)	3.45 (0.7-4.41)	3.91
	7	12	12	12	18	-	1.55	2.66	2.66	2.66	3.97	-	13.5 (3.5-16.0)	3.44 (0.7-4.41)	3.92
	7	12	12	14	14	-	1.60	2.75	2.75	3.20	3.20	-	13.5 (3.5-16.0)	3.45 (0.7-4.41)	3.91
	7	12	14	14	14	-	1.55	2.65	3.10	3.10	3.10	-	13.5 (3.5-16.0)	3.44 (0.7-4.41)	3.92
	9	9	9	9	9	-	2.70	2.70	2.70	2.70	2.70	-	13.5 (3.5-16.0)	3.49 (0.7-4.41)	3.87
	9	9	9	9	12	-	2.53	2.53	2.53	2.53	3.38	-	13.5 (3.5-16.0)	3.48 (0.7-4.41)	3.88
	9	9	9	9	14	-	2.43	2.43	2.43	2.43	3.78	-	13.5 (3.5-16.0)	3.48 (0.7-4.41)	3.88
	9	9	9	9	18	-	2.25	2.25	2.25	2.25	4.50	-	13.5 (3.5-16.0)	3.46 (0.7-4.41)	3.90
	9	9	9	9	24	-	2.03	2.03	2.03	2.03	5.38	-	13.5 (3.5-16.0)	3.45 (0.7-4.41)	3.91
	9	9	9	12	12	-	2.38	2.38	2.38	3.18	3.18	-	13.5 (3.5-16.0)	3.47 (0.7-4.41)	3.89
	9	9	9	12	14	-	2.29	2.29	2.29	3.06	3.57	-	13.5 (3.5-16.0)	3.47 (0.7-4.41)	3.89
	9	9	9	12	18	-	2.13	2.13	2.13	2.84	4.27	-	13.5 (3.5-16.0)	3.45 (0.7-4.41)	3.91
	9	9	9	14	14	-	2.21	2.21	2.21	3.44	3.44	-	13.5 (3.5-16.0)	3.46 (0.7-4.41)	3.90
	9	9	9	14	18	-	2.06	2.06	2.06	3.20	4.12	-	13.5 (3.5-16.0)	3.45 (0.7-4.41)	3.91
	9	9	12	12	12	-	2.25	2.25	3.00	3.00	3.00	-	13.5 (3.5-16.0)	3.46 (0.7-4.41)	3.90
	9	9	12	12	14	-	2.17	2.17	2.89	2.89	3.38	-	13.5 (3.5-16.0)	3.46 (0.7-4.41)	3.90
	9	9	12	12	18	-	2.03	2.03	2.70	2.70	4.04	-	13.5 (3.5-16.0)	3.45 (0.7-4.41)	3.91
	9	9	12	14	14	-	2.09	2.09	2.80	3.26	3.26	-	13.5 (3.5-16.0)	3.45 (0.7-4.41)	3.91
	9	9	12	14	18	-	1.96	1.96	2.61	3.05	3.92	-	13.5 (3.5-16.0)	3.44 (0.7-4.41)	3.92
	9	9	14	14	14	-	2.03	2.03	3.15	3.15	3.15	-	13.5 (3.5-16.0)	3.45 (0.7-4.41)	3.91
	9	12	12	12	12	-	2.14	2.84	2.84	2.84	2.84	-	13.5 (3.5-16.0)	3.45 (0.7-4.41)	3.91
	9	12	12	12	14	-	2.06	2.75	2.75	2.75	3.19	-	13.5 (3.5-16.0)	3.45 (0.7-4.41)	3.91
	9	12	12	14	14	-	1.98	2.66	2.66	3.10	3.10	-	13.5 (3.5-16.0)	3.44 (0.7-4.41)	3.92
	12	12	12	12	12	-	2.70	2.70	2.70	2.70	2.70	-	13.5 (3.5-16.0)	3.45 (0.7-4.41)	3.91
	12	12	12	12	14	-	2.61	2.61	2.61	2.61	3.06	-	13.5 (3.5-16.0)	3.44 (0.7-4.41)	3.92
6-unit connection	7	7	7	7	7	7	2.20	2.20	2.20	2.20	2.20	2.20	13.2 (3.5-15.3)	3.28 (0.7-4.20)	4.02
	7	7	7	7	7	9	2.15	2.15	2.15	2.15	2.15	2.75	13.5 (3.5-16.0)	3.37 (0.7-4.41)	4.00
	7	7	7	7	7	12	2.01	2.01	2.01	2.01	2.01	3.45	13.5 (3.5-16.0)	3.37 (0.7-4.41)	4.00
	7	7	7	7	7	14	1.93	1.93	1.93	1.93	1.93	3.85	13.5 (3.5-16.0)	3.37 (0.7-4.41)	4.00
	7	7	7	7	7	18	1.78	1.78	1.78	1.78	1.78	4.60	13.5 (3.5-16.0)	3.37 (0.7-4.41)	4.00
	7	7	7	7	7	24	1.60	1.60	1.60	1.60	1.60	5.50	13.5 (3.5-16.0)	3.37 (0.7-4.41)	4.00
	7	7	7	7	9	9	2.05	2.05	2.05	2.05	2.65	2.65	13.5 (3.5-16.0)	3.37 (0.7-4.41)	4.00
	7	7	7	7	9	12	1.93	1.93	1.93	1.93	2.48	3.30	13.5 (3.5-16.0)	3.37 (0.7-4.41)	4.00
	7	7	7	7	9	14	1.85	1.85	1.85	1.85	2.38	3.72	13.5 (3.5-16.0)	3.37 (0.7-4.41)	4.00
	7	7	7	7	9	18	1.72	1.72	1.72	1.72	2.21	4.41	13.5 (3.5-16.0)	3.37 (0.7-4.41)	4.00
	7	7	7	7	9	24	1.55	1.55	1.55	1.55	1.99	5.31	13.5 (3.5-16.0)	3.37 (0.7-4.41)	4.00
	7	7	7	7	12	12	1.82	1.82	1.82	1.82	3.11	3.11	13.5 (3.5-16.0)	3.37 (0.7-4.41)	4.00
	7	7	7	7	12	14	1.75	1.75	1.75	1.75	3.00	3.50	13.5 (3.5-16.0)	3.37 (0.7-4.41)	4.00
	7	7	7	7	12	18	1.63	1.63	1.63	1.63	2.79	4.19	13.5 (3.5-16.0)	3.37 (0.7-4.41)	4.00
	7	7	7	7	14	14	1.69	1.69	1.69	1.69	3.37	3.37	13.5 (3.5-16.0)	3.37 (0.7-4.41)	4.00
	7	7	7	7	14	18	1.58	1.58	1.58	1.58	3.15	4.03	13.5 (3.5-16.0)	3.37 (0.7-4.41)	4.00
	7	7	7	9	9	9	1.97	1.97	1.97	2.53	2.53	2.53	13.5 (3.5-16.0)	3.37 (0.7-4.41)	4.00
	7	7	7	9	9	12	1.85	1.85	1.85	2.38	2.38	3.19	13.5 (3.5-16.0)	3.37 (0.7-4.41)	4.00
	7	7	7	9	9	14	1.78	1.78	1.78	2.29	2.29	3.58	13.5 (3.5-16.0)	3.37 (0.7-4.41)	4.00
	7	7	7	9	9	18	1.66	1.66	1.66	2.13	2.13	4.26	13.5 (3.5-16.0)	3.37 (0.7-4.41)	4.00
	7	7	7	9	12	12	1.75	1.75	1.75	2.25	3.00	3.00	13.5 (3.5-16.0)	3.37 (0.7-4.41)	4.00
	7	7	7	9	12	14	1.69	1.69	1.69	2.17	2.89	3.37	13.5 (3.5-16.0)	3.37 (0.7-4.41)	4.00
	7	7	7	9	12	18	1.58	1.58	1.58	2.03	2.70	4.03	13.5 (3.5-16.0)	3.37 (0.7-4.41)	4.00
	7	7	7	9	14	14	1.63	1.63	1.63	2.09	3.26	3.26	13.5 (3.5-16.0)	3.37 (0.7-4.41)	4.00
	7	7	7	12	12	12	1.66	1.66	1.66	2.84	2.84	2.84	13.5 (3.5-16.0)	3.37 (0.7-4.41)	4.00
	7	7	7	12	12	14	1.60	1.60	1.60	2.75	2.75	3.20	13.5 (3.5-16.0)	3.37 (0.7-4.41)	4.00
	7	7	7	12	14	14	1.55	1.55	1.55	2.65	3.10	3.10	13.5 (3.5-16.0)	3.37 (0.7-4.41)	4.00
	7	7	9	9	9	9	1.89	1.89	2.43	2.43	2.43	2.43	13.5 (3.5-16.0)	3.37 (0.7-4.41)	4.00
	7	7	9	9	9	12	1.78	1.78	2.29	2.29	2.29	3.07	13.5 (3.5-16.0)	3.37 (0.7-4.41)	4.00
	7	7	9	9	9	14	1.72	1.72	2.21	2.21	2.21	3.43	13.5 (3.5-16.0)	3.37 (0.7-4.41)	4.00
	7	7	9	9	9	18	1.60	1.60	2.06	2.06	2.06	4.12	13.5 (3.5-16.0)	3.37 (0.7-4.41)	4.00
	7	7	9	9	12	12	1.69	1.69	2.17	2.17	2.89	2.89	13.5 (3.5-16.0)	3.37 (0.7-4.41)	4.00
	7	7	9	9	12	14	1.63	1.63	2.09	2.09	2.79	3.27	13.5 (3.5-16.0)	3.37 (0.7-4.41)	4.00
	7	7	9	9	12	18	1.52	1.52	1.96	1.96	2.61	3.93	13.5 (3.5-16.0)	3.37 (0.7-4.41)	4.00
	7	7	9	9	14	14	1.58	1.58	2.03	2.03	3.14	3.14	13.5 (3.5-16.0)	3.37 (0.7-4.41)	4.00
	7	7	9	12	12	12	1.60	1.60	2.05	2.75	2.75	2.75	13.5 (3.5-16.0)	3.37 (0.7-4.41)	4.00
	7	7	9	12	12	14	1.55	1.55	1.99	2.66	2.66	3.09	13.5 (3.5-16.0)	3.37 (0.7-4.41)	4.00
	7	7	12	12	12	12	1.53	1.53	2.61	2.61	2.61	2.61	13.5 (3.5-16.0)	3.37 (0.7-4.41)	4.00
	7	9	9	9	9	9	1.80	2.34	2.34	2.34	2.34	2.34	13.5 (3.5-16.0)	3.37 (0.7-4.41)	4.00
	7	9	9	9	9	12	1.72	2.21	2.21	2.21	2.21	2.94	13.5 (3.5-16.0)	3.37 (0.7-4.41)	4.00
	7	9	9	9	9	14	1.66	2.13	2.13	2.13	2.13	3.32	13.5 (3.5-16.0)	3.37 (0.7-4.41)	4.00
	7	9	9	9	12	12	1.65	2.09	2.09	2.09	2.79	2.79	13.5 (3.5-16.0)	3.37 (0.7-4.41)	4.00
	7	9	9	9	12	14	1.58	2.03	2.03	2.03	2.69	3.14	13.5 (3.5-16.0)	3.37 (0.7-4.41)	4.00
	7	9	9	12	12	12	1.54	1.99	1.99	2.66	2.66	2.66	13.5 (3.5-16.0)	3.37 (0.7-4.41)	4.00
	9	9	9	9

Feature Summary

Type		Wall-mounted type								
Series		Designer series		Standard series	Standard series		Designer series	Standard series	
Model name		ASEH07/09/12/14KGTG ASYG07/09/12/14KGTF	 ASEG07/09/12/14KETF, ASEG07/09/12/14KETF-B, ASYG07/09/12/14KETE, ASYG07/09/12/14KETE-B	 ASEH07/09/12/14KMCG ASEH07/09/12/14KMCG-B ASYG07/09/12/14KMCF	 ASEH05/07/09/12KNCA	 ASEG18/22/24KMTE	 ASYG07/09/12/14LUCA	 ASYG07/09/12/14LMCE	 ASYG18LFCA, ASYG24LFCC
Refrigerant		R32			R32		R410A		
Energy-saving Features	Save Occupancy sensor	●							
	Economy operation	●	●	●	●	●	●	●	●
	Setting temperature range limitation	○	○	○		○	○	○	○
	Set temperature auto return	○	○	○		○	○	○	○
Features for Comfort	Power diffuser							●	●
	Powerful operation	●	●	●	●	●			
	10°C Heat	●	●	●	●	●	●	●	●
	Outdoor unit low noise operation	●	●	●	●	●			
	Auto changeover	●	●	●	●	●	●	●	●
	UP/DOWN swing louver	●	●	●	●		●	●	
	Double swing automatic				●	●			●
	Automatic fan speed	●	●	●	●	●	●	●	●
	Auto restart	●	●	●	●	●	●	●	●
	Connectable fresh air duct								
	Fresh air intake								
	Connectable distributing duct								
Convenience Features	Auto-off timer	○	○	○	●	○	○	○	○
	Sleep timer	●	●	●	●	●	●	●	●
	Program timer	●	●	●	●	●	●	●	●
	Weekly timer	●	●	○	○	●	●		
	Weekly & Temperature setback timer	○	○	○		○	○	○	○
	Filter sign	●	●	●	●	●	●	●	●
	External error output	○	○	○		○	○	○	○
	External ON/OFF input	○	○	○		○	○	○	○
	Wireless LAN control	● (KGTG), ○ (KGTF)	● (KETF, KETF-B), ○ (KETE, KETE-B)	● (KMCG, KMCG-B), ○ (KMCF)	●	○	○	○	○
Clean Features	Ion deodorization filter	●	●	●		●	●	●	●
	Apple-catechin filter	●	●	●		●	●	●	●
	Long-life filter								
	Washable panel	●	●	●	●	●		●	●
	Silver Ion Filter	○	○	○	○	○	○	○	○
Instalation / Support	Automatic airflow adjustment								
	Drain pump as standard								
	Blue fin				●				● (30)
	Refrigerant cycle monitor								

○ : Optional function

MULTI-SPLIT

Feature Summary

Type	Cassette			Duct			Duct				Floor		Floor/Ceiling	Ceiling	
Series	Compact 4-way Flow Grid type Series	Compact 4-way Flow Series	4-way Flow Series	Mini (With drain pump)		Slim (With drain pump)	Slim (With drain pump)	Medium Static Pressure							
Model name	AUXG 07/09/12/ 14/18/22/24 KVLA	AUYG07/09LVLA, AUYG12/14/18LVLB, AUYG22/24LVLA	AUYG30/36LRLE, AUYG36/45LRLA	ARXG 07/09/12/14/18 KSLAP	ARYG 07/09/12/14/18 LSLAP	ARXG 07/09/12/14/18 KLLAP	ARYG07/09LLTA, ARYG12/14/18LLTB	ARXH 12/14/18/22 KMTAP	ARXG22KMLB, ARXG24KMLA	ARYG 22/24/36/45 LMLA, ARYG 30/36LMLE	AGEG 09/12/14 KVCA	AGYG 09/12/14 LVCA	ABYG 14/22/24 LVTA, ABYG18LVTB	ABEG18/22KRTA	ABYG30/36LRTE, ABYG36/45LRTA
Refrigerant	R32	R410A	R410A	R32	R410A	R32	R410A	R32		R410A	R32	R410A		R32	R410A
Energy-saving Features: Save Occupancy sensor															
Energy-saving Features: Economy operation	●	●	●	●	●	●	●	○	●	●	●	●	●	●	●
Energy-saving Features: Setting temperature range limitation	○	○	○	●	●	○	○	○	○	○	○	○	○	●	○
Energy-saving Features: Set temperature auto return	●	○	○	●	●	●	○	○	●	○	○	○	○	●	○
Features for Comfort: Power diffuser															
Features for Comfort: Powerful operation											●				
Features for Comfort: 10°C Heat	●	●	○	○	○	○	○	○	○	○	●	●	●	○	●
Features for Comfort: Outdoor unit low noise operation										○ (45) (36LMLA)	●			○	○ (45/54)(36LRTA)
Features for Comfort: Auto changeover	●	●	●	●	●	●	●	●	●	●	●	●	●	●	●
Features for Comfort: UP/DOWN swing louver	●	●	●	○	○	○	○				●	●		●	
Features for Comfort: Double swing automatic													●		●
Features for Comfort: Automatic fan speed	●	●	●	●	●	●	●	●	●	●	●	●	●	●	●
Features for Comfort: Auto restart	●	●	●	●	●	●	●	●	●	●	●	●	●	●	●
Features for Comfort: Connectable fresh air duct		○	●					●	●	●				●	●
Features for Comfort: Fresh air intake	○	○	○			○	○	○	○	○				○	○
Features for Comfort: Connectable distributing duct									●	●					
Convenience Features: Auto-off timer	●	○	○	●	●	●	○	●	●	○	○	○	○	●	○
Convenience Features: Sleep timer	●	●	○	○	○	○	○	○	○	○	●	●	●	○	●
Convenience Features: Program timer	●	●	○	○	○	○	○	●	○	○	●	●	●	○	●
Convenience Features: Weekly timer	●			●	●	●		○	●		●			●	
Convenience Features: Weekly & Temperature setback timer	○	○	●			●	●		●	●		○	○		○
Convenience Features: Filter sign	●	●	●	●	●	●	●	●	●	●	●	●	●	●	●
Convenience Features: External error output				○	○			●			○			○	
Convenience Features: External ON/OFF input	●	○	○	●	●	●	○	●	●	○	○	○	○	●	○
Convenience Features: Wireless LAN control	○	○	○	○	○	○	○	○	○	○	○	○	○	○	○
Clean Features: Ion deodorization filter											●	●			
Clean Features: Apple-catechin filter											●	●			
Clean Features: Long-life filter								○	○	○	●	●			
Clean Features: Washable panel															
Clean Features: Silver Ion Filter	○	○	○	○	○	○	○	○	○	○	○	○			
Installation / Support: Automatic airflow adjustment								●							
Installation / Support: Drain pump as standard	●	●	●	●	●	●	●	●	○	○				○	○
Installation / Support: Blue fin			● (45/54)							● (45)				● (30/36/45/54)	● (45)
Installation / Support: Refrigerant cycle monitor								○							

○ : Optional function