Notated dimensions and/or levels to be used only.
No assumptions are to be made regarding this drawing.

IMPORTANT : DO NOT SCALE FROM THIS DRAWING

NOTES

Refer to drawing Drg. –/04 for general structural notes.

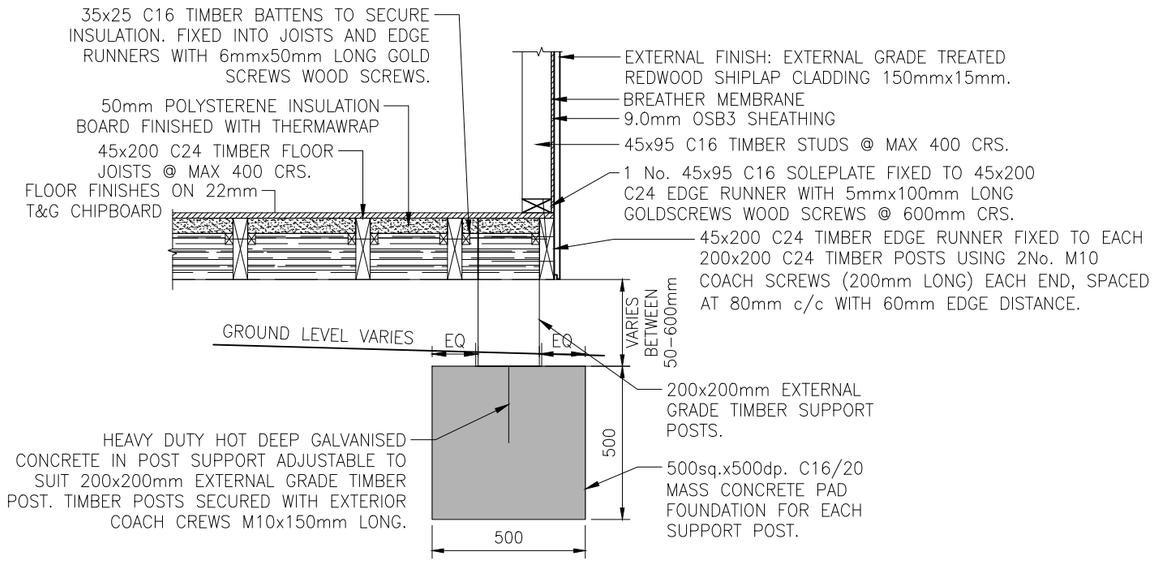

SECTION 1–1

SCALE 1:20

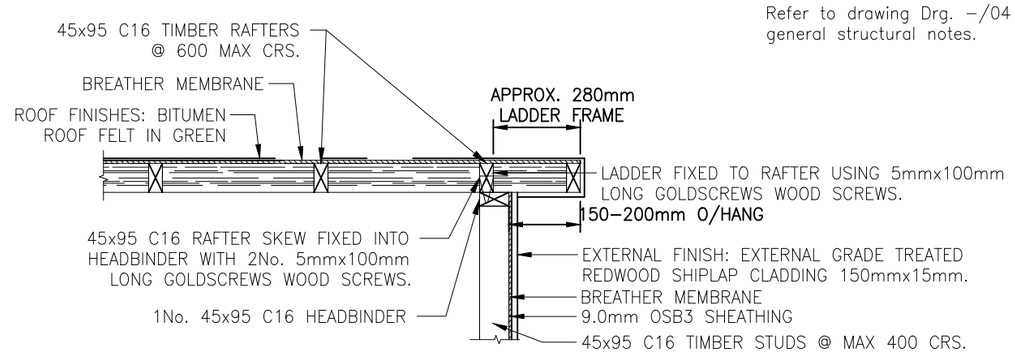

SECTION 3–3

SCALE 1:20

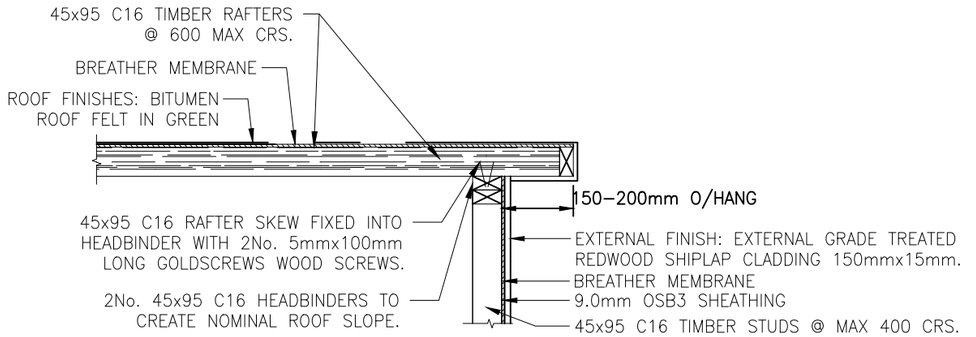

DEATAIL 'A'

SCALE 1:20

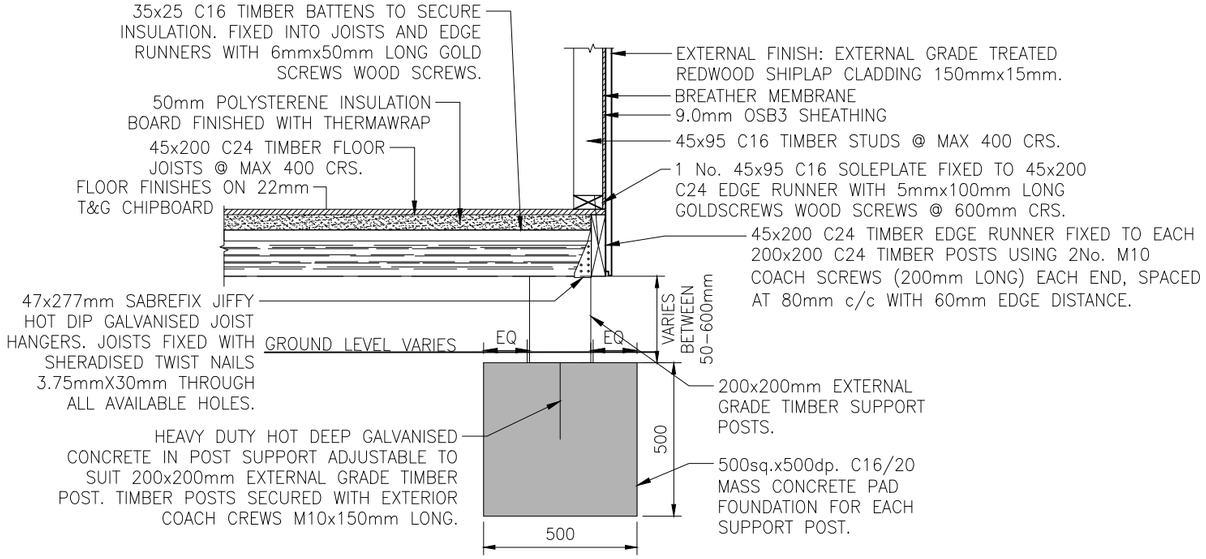

SECTION 2–2

SCALE 1:20

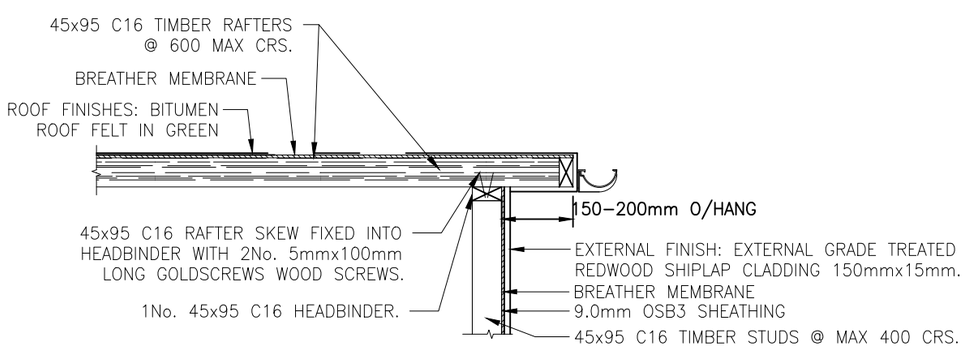

DEATAIL 'B'

SCALE 1:20

EXTERNAL STUD PANEL CONSTRUCTION

Loadbearing & racking panel studs:
45x95mm Strength Class C16 studs at 400mm crs. U.N.O. with 45x95mm C16 sole plates, header plates and noggings. 9mm Type F2 OSB sheathing fixed to external side of panels (U.N.O.). All loadbearing stud work to be fixed together using 5x100mm long GOLDSCREWS wood screws.

ref	date	revision
Adress	24 TAVISTOCK AVENUE DE5 3SE RIPLEY	
Title	GARDEN ROOM / HOME GYM CONSTRUCTION DETAILS	
Drn AZ	Date OCT 2025	
Scale AS NOTED AT A3 (or as shown)	Current Rev A	
DRG. No. 01_SHEET 3		