Notated dimensions and/or levels to be used only.
No assumptions are to be made regarding this drawing.

IMPORTANT : DO NOT SCALE FROM THIS DRAWING

NOTES

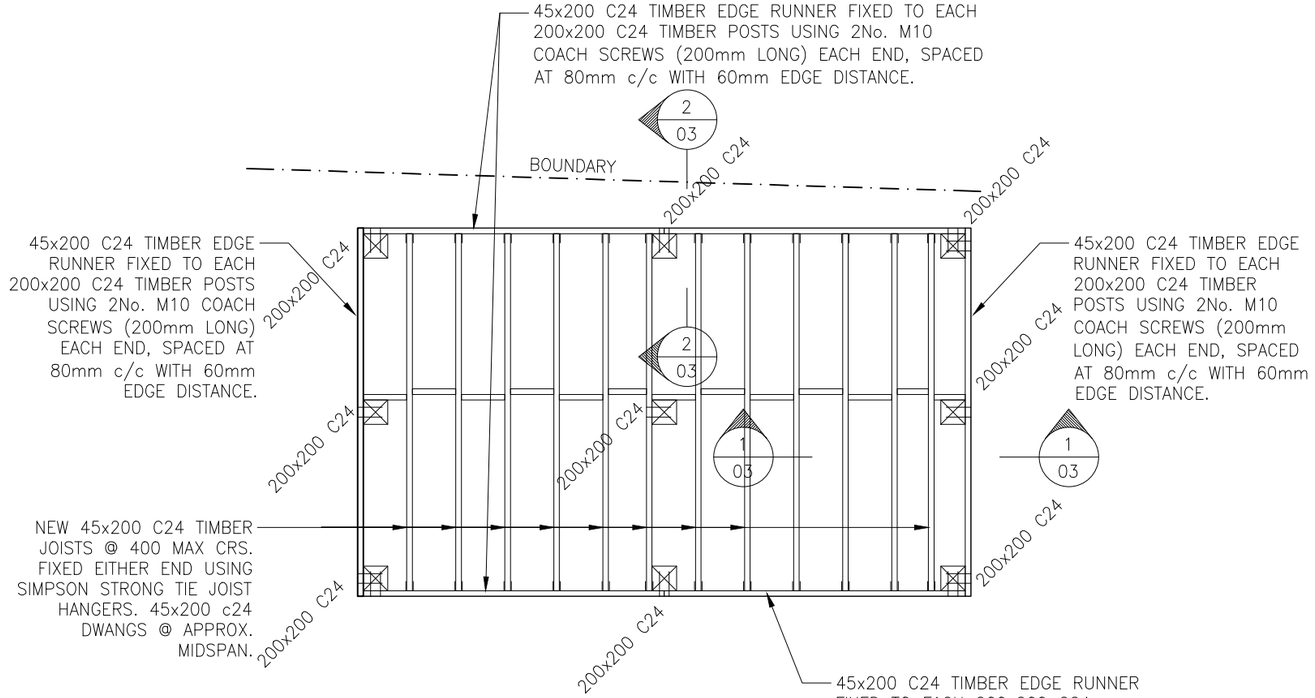

PROPOSED PLAN ON FLOOR STRUCTURE

SCALE 1:50

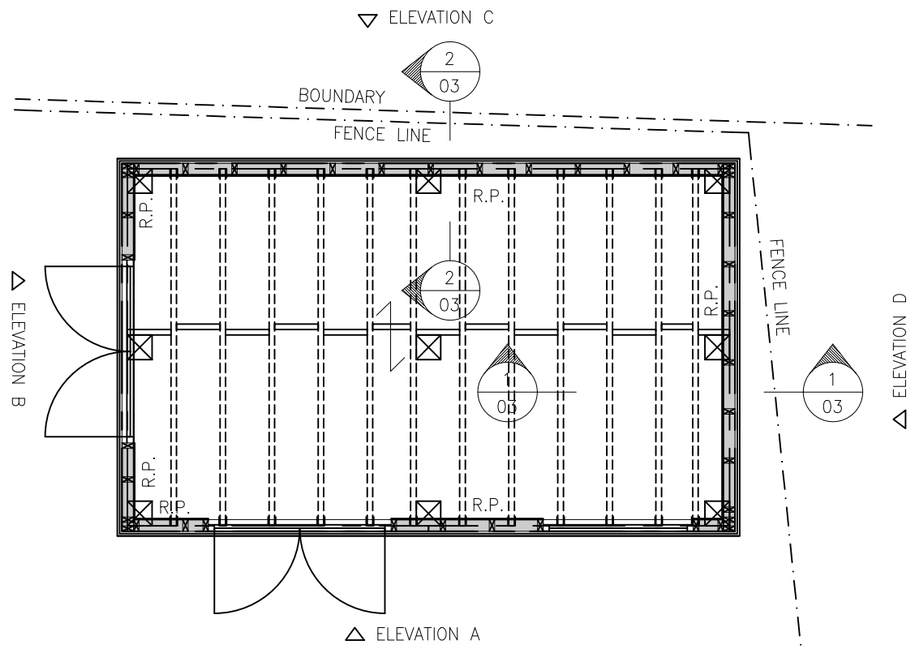

PROPOSED FLOOR LAYOUT

SCALE 1:50

– DENOTES 45x95 C16 LOADBEARING STUDS @ 400 MAX CRS.

R.P. – DENOTES A RACKING PANEL. 9mm OSB PANELS.

– DENOTES SPAN OF NEW 45x95 C16 ROOF RAFTERS @600mm c/c AND NEW 45x200 C24 TIMBER FLOOR JOISTS @400mm c/c.

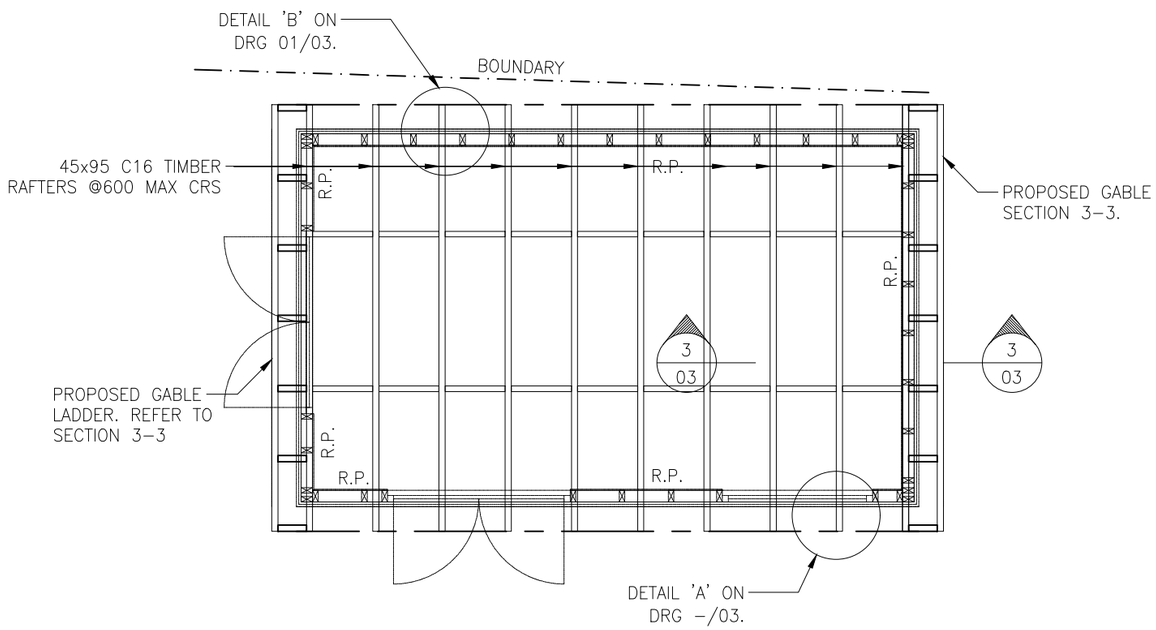

PROPOSED ROOF LAYOUT

SCALE 1:50

ref	date	revision
Adress	24 TAVISTOCK AVENUE DE5 3SE RIPLEY	
Title	GARDEN ROOM / HOME GYM FLOOR & ROOF PLANS AND LAYOUTS	
Drn AZ	Date OCT 2025	
Scale AS NOTED AT A3 (or as shown)	Current Rev A	
DRG. No. 01_SHEET 1		