FULL SIZE

INSIDE

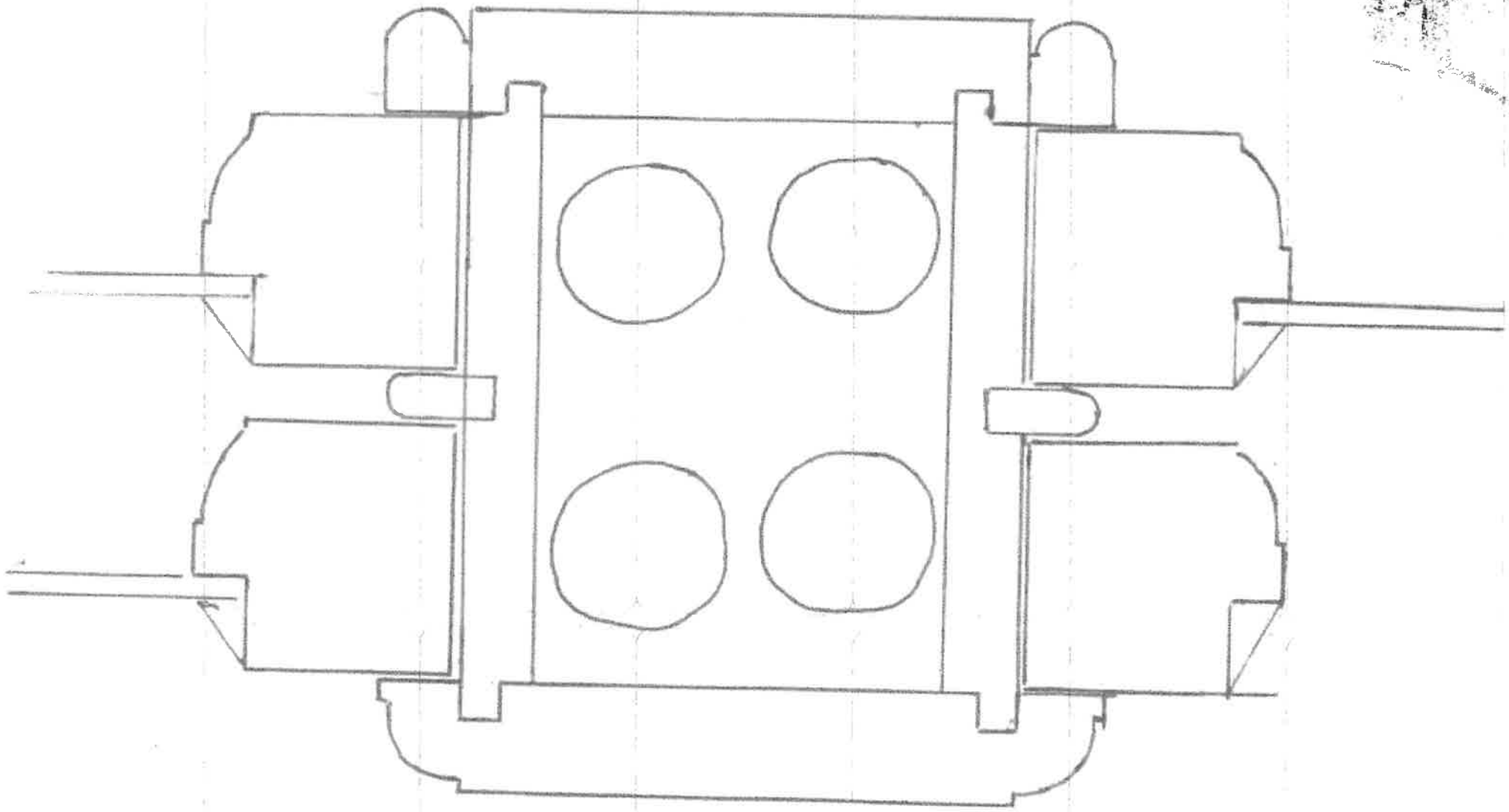

MIDLE SECTION OF TOP WINDOW
ALL REST OF FRAME IS SAME AS
1st & 2nd FLOOR