

Existing Front Elevation



Existing R.H.S. Elevation

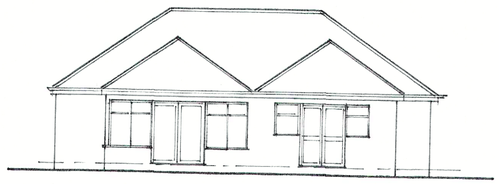

Existing Rear Elevation

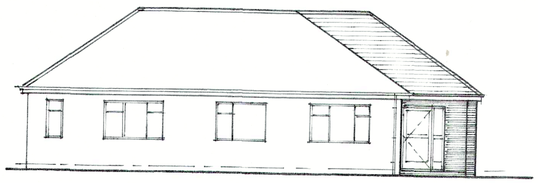

Proposed Front Elevation

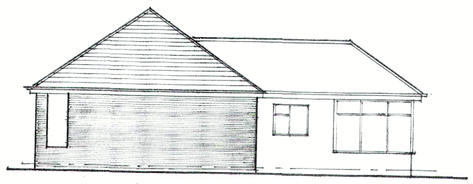

Proposed R.H.S. Elevation

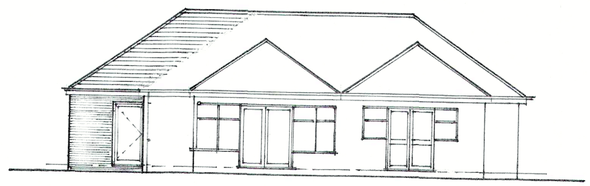

Proposed Rear Elevation

Proposed Floor Plan

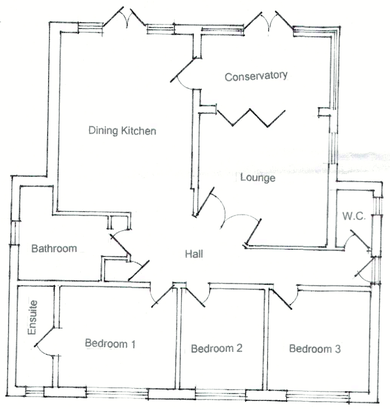

Existing Floor Plan

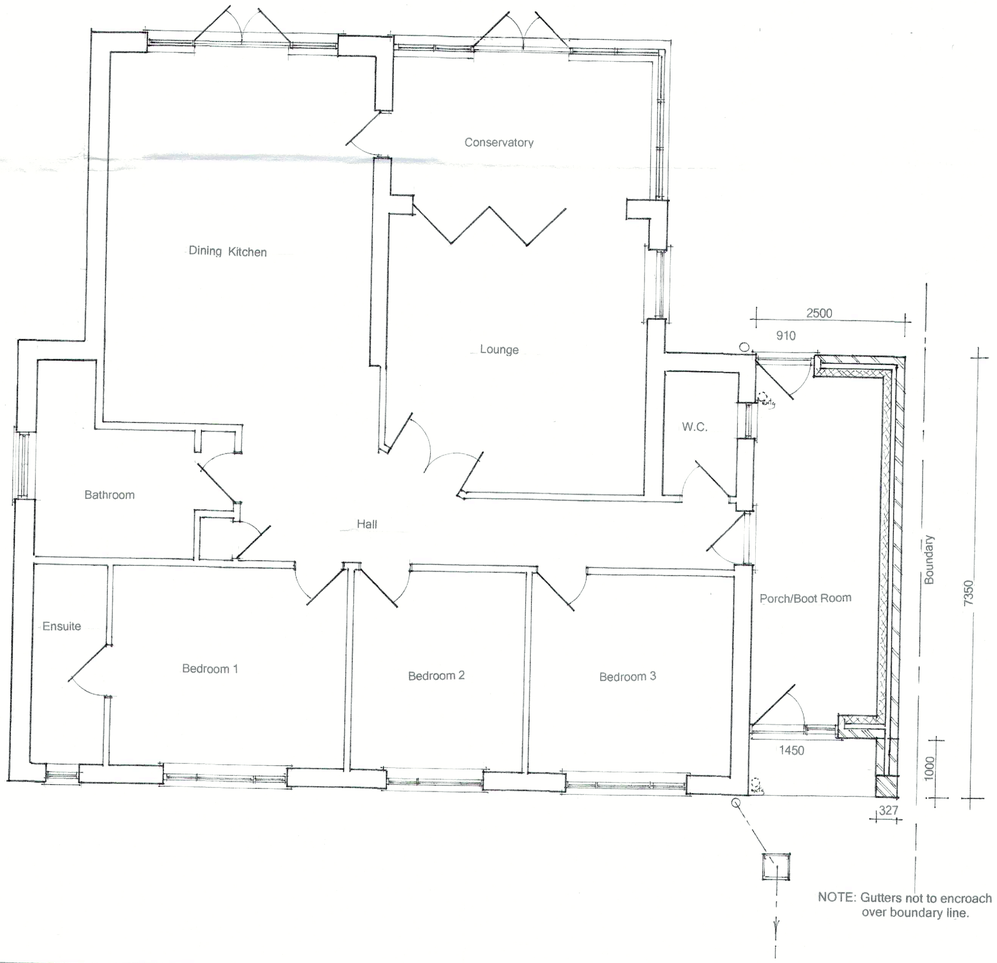

NOTE: Gutters not to encroach over boundary line.

Existing Roof Plan

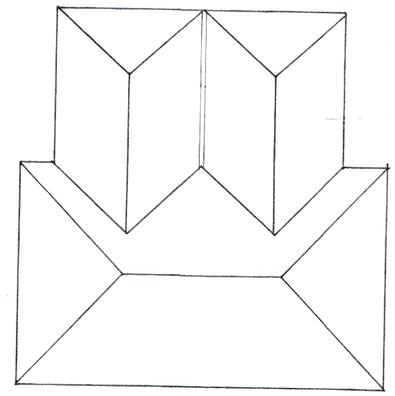

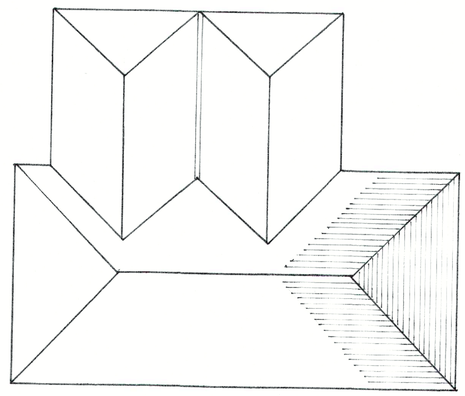

NOTES

All dimensions must be checked on site and not scaled from this drawing.

BUILDER/CONTRACTOR NOTE:
Do not scale off drawings.
Surface survey only, builders to satisfy themselves with on site details.
All details and dimensions both existing and proposed to be checked on site before commencing any works.
Levels to be checked/confirmed on site.
All existing drainage details/levels and directional runs to be checked on site.

Ordering of materials and manufactured components should only be carried out after confirmation of on site details and dimensions.
All materials specified to be used strictly in accordance with manufacturers recommendations.

CDM REGULATIONS 2022
Builders/contractors to comply to the new CDM Regulation requirements
Domestic clients to comply by completing a Construction Phase Plan in conjunction with builder/contractor to satisfy HSE requirements.

	Date	Revisions
E		
D		
C		
B		
A		

© copyright

Client
MR R ALLEN

Job Title
4 DERWENT ROAD
RIPLEY
DERBYS DE5 3GS

Drawing Title
PROPOSED EXTENSION
PORCH/BOOT ROOM

Scale 1:50 ; 1:100

Date DEC/2025 | Drawn by MM

Drg. No. RA/DR/RIP/DEC/2025 | Rev.

ENNINE DOS

841 x 594mm A1