DETAIL 7 MULLION

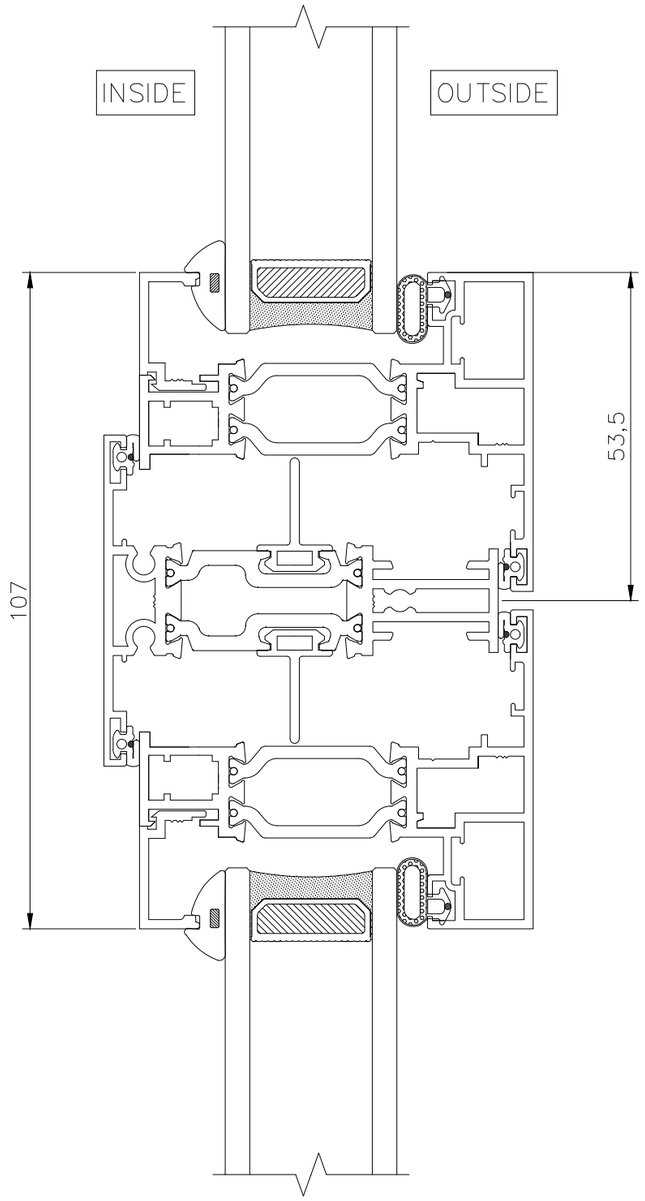

OW–70S

DRAWING REFERENCE: MULLION AND SQUARE SASH
DRAWING NUMBER: OW70S–7
REV: 1

THIS INFORMATION AND DRAWING ARE THE COPYRIGHT OF ORIGIN FRAMES LIMITED. COPYRIGHT IS RESERVED BY THEM AND IS ISSUED ON THE CONDITION THAT IT IS NOT COPIED OR DISCLOSED BY OR TO ANY UNAUTHORISED PERSONS WITHOUT PRIOR CONSENT OF ORIGIN FRAMES LIMITED. ALL DIMENSIONS ARE IN MM. DO NOT SCALE.

origin

DETAIL 13 CASEMENT BEAD OPTIONS

SQUARE BEAD

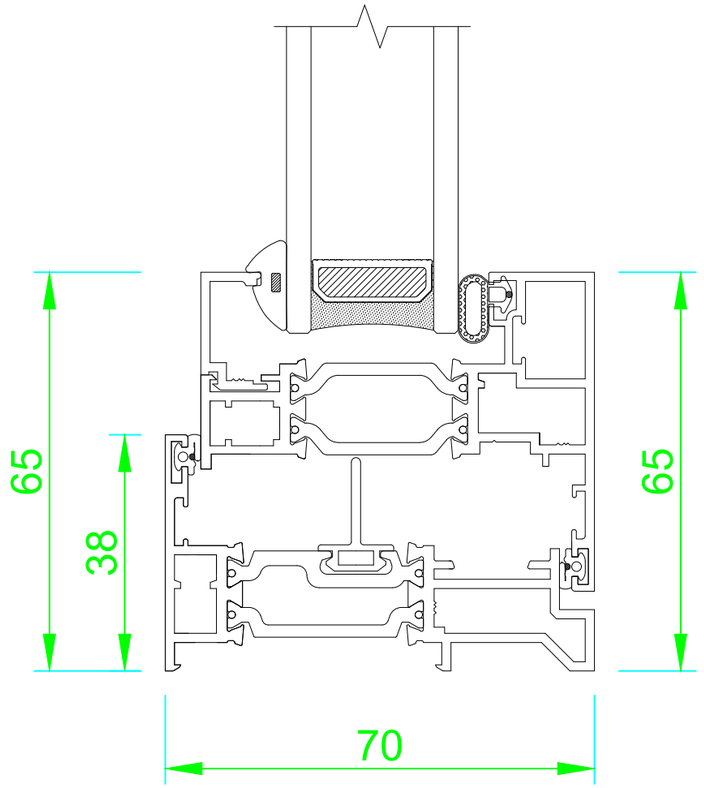

OW–70S

DRAWING REFERENCE: CASEMENT BEAD OPTION
DRAWING NUMBER: OW70S–13
REV: 1

THIS INFORMATION AND DRAWING ARE THE COPYRIGHT OF ORIGIN FRAMES LIMITED. COPYRIGHT IS RESERVED BY THEM AND IS ISSUED ON THE CONDITION THAT IT IS NOT COPIED OR DISCLOSED BY OR TO ANY UNAUTHORISED PERSONS WITHOUT PRIOR CONSENT OF ORIGIN FRAMES LIMITED. ALL DIMENSIONS ARE IN MM. DO NOT SCALE.

origin

Site Address:	Drawing Title:	Drawing No: 005
Windmill Barn Sandhall Lane Alderwasley DE56 2RD	Proposed Window Sections All measurements to be checked on site.	
	JF / CN	JF Planning 45 Bakehouse Lane Ockbrook DE723RH jamie@jfplanning.com 07800834034.
Date: December 2025	Scale: 1:1	