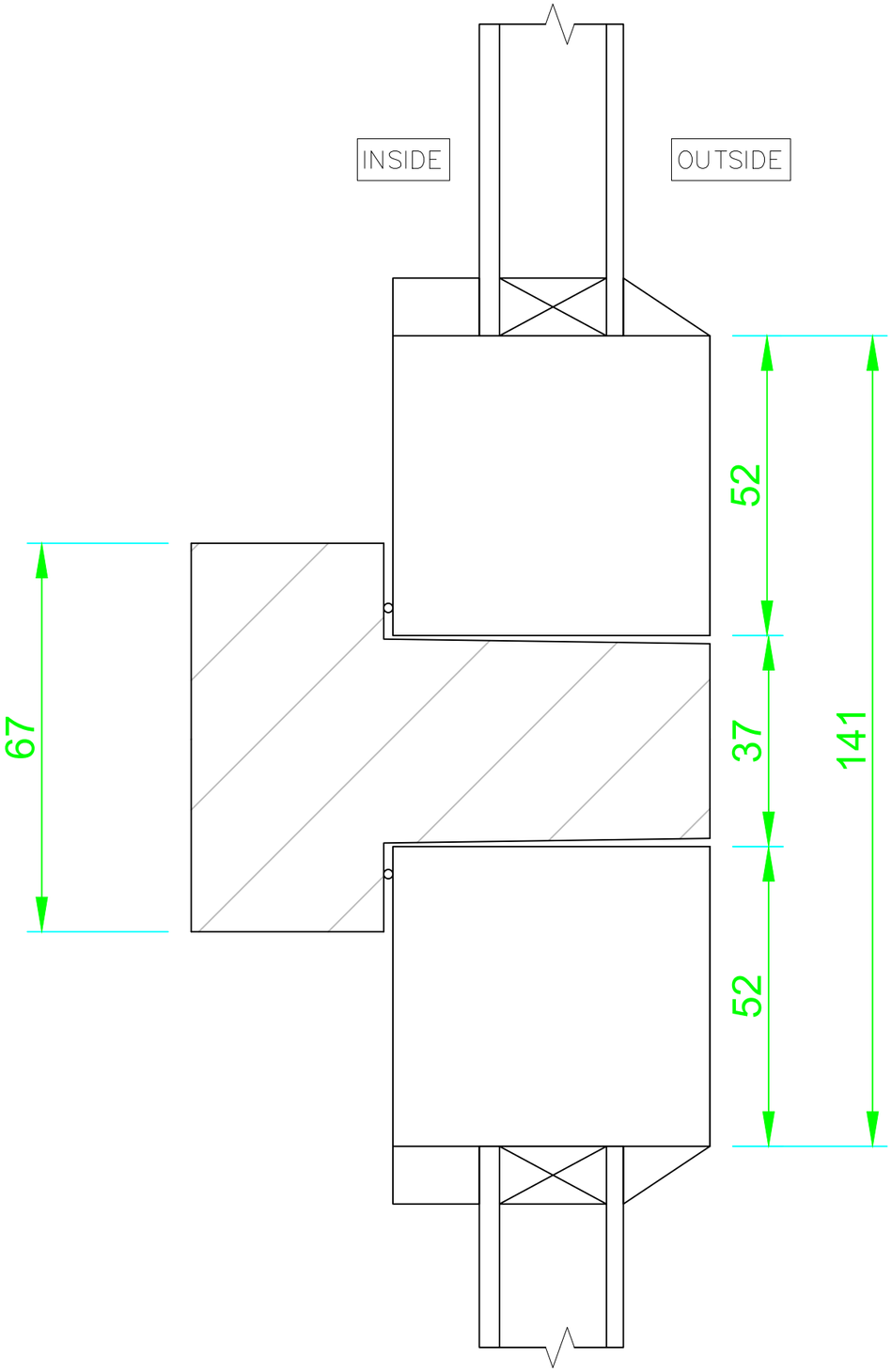

Existing Mullion Section

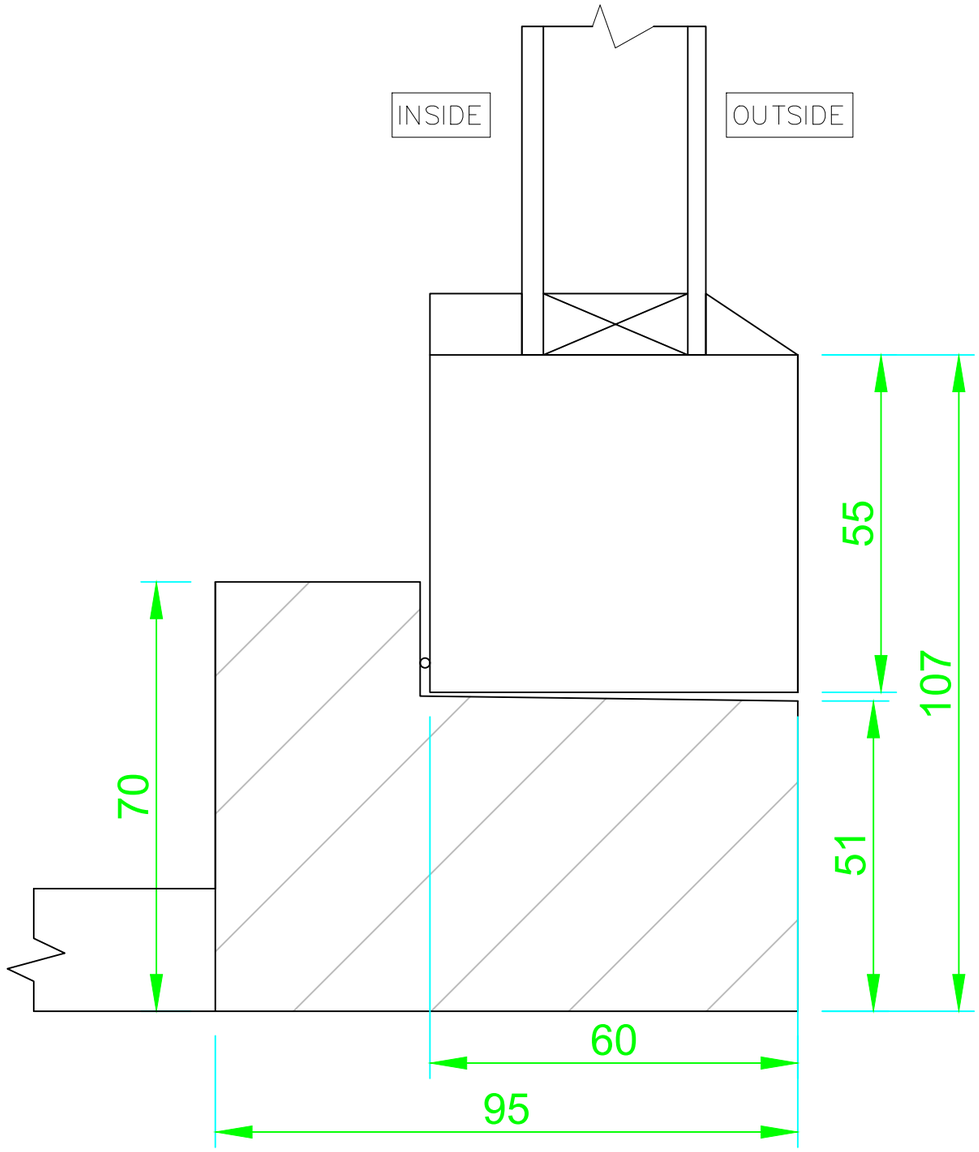

Existing Frame Section

Site Address:	Drawing Title:	Drawing No: 004
Windmill Barn Sandhall Lane Alderwasley DE56 2RD	Existing Widow Sections All measurements to be checked on site.	
	JF / MC	JF Planning 45 Bakehouse Lane Ockbrook DE723RH jamie@jfplanning.com 07800834034.
Date: December 2025	Scale: 1:1	