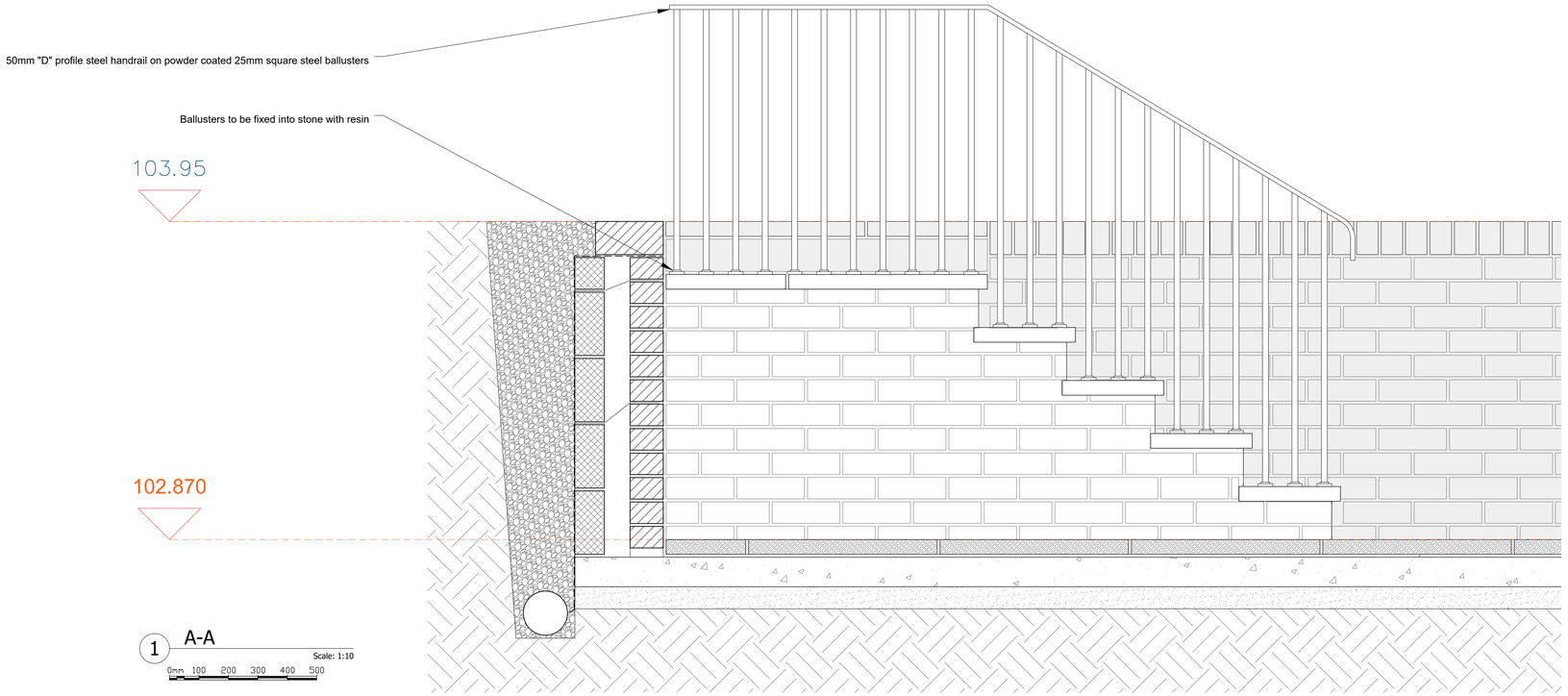

1 A-A
Scale: 1:10
0mm 100 200 300 400 500

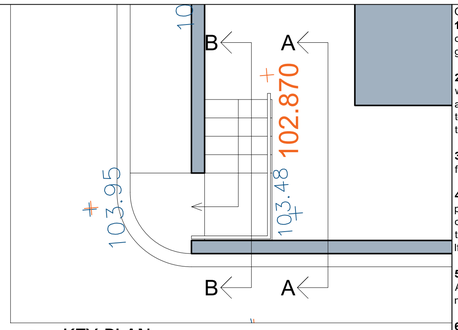

4 KEY PLAN
Scale: 1:50
0 500 1000 1500 2000 2500

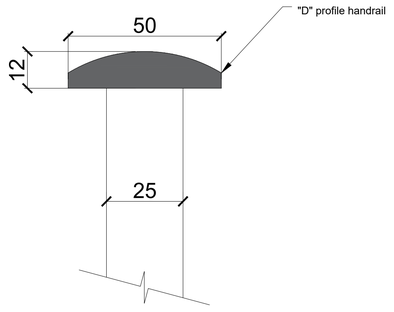

3 SECTION OF HANDRAIL AND BALUSTER
Scale: 1:1
1 2 3 4 5

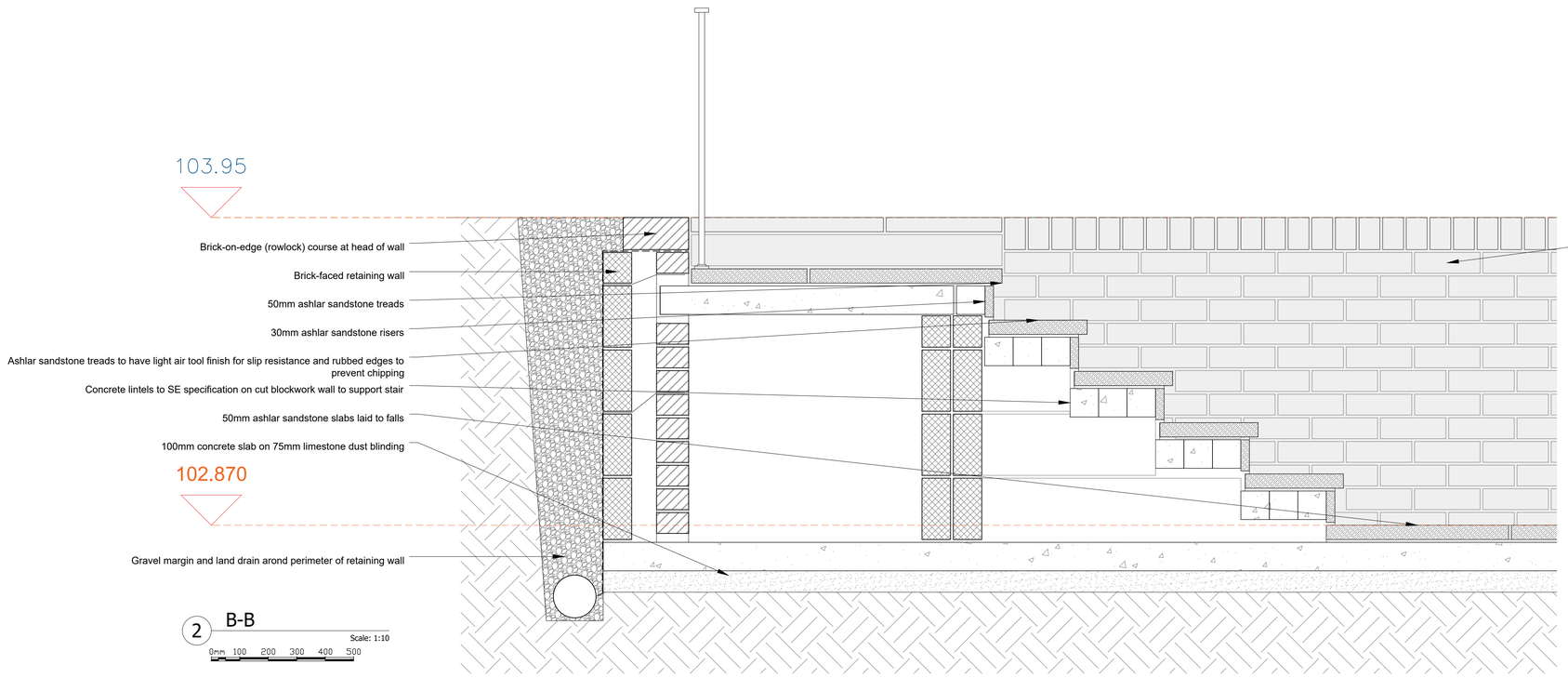

2 B-B
Scale: 1:10
0mm 100 200 300 400 500

Facing brickwork and brick on edge capping to be Furness "Old Terrace Blend"



General Notes:

1 All finishes disturbed and all damage caused resulting from the works is to be made good.

2 This drawing is to be read in conjunction with Drawing Nos issued with the prefix 1160/ and any specification of materials and works together with any accompanying schedules that may be issued.

3 Inform the Architects of all untoward findings or discrepancies.

4 Written dimensions are to be taken in preference to scaled. All dimensions are to be confirmed on site prior to commencement of the works. Do not scale from these drawings. If in doubt ask.

5 Where Architects approval is required the Architects confirm that a minimum of 1 week notice must be given for inspection.

6 Where possible the Architects have undertaken not to specify deleterious materials.

7 This drawing is copyright ©. Smith and Roper retain copyright of this drawing and other project documents under the Copyright Designs and Patents Act 1988 with all rights reserved excepting that Smith and Roper hereby grant license to the client named below for the use of such drawings and documents in matters relating only to the project stated below. Under no circumstances may this drawing or associated documents be copied in whole or in part or used elsewhere without the express permission of Smith and Roper.

Key:

Revision Notes:
REV A - MAY 26 - Revised to stair layout

SMITH AND ROPER
ARCHITECTS AND SURVEYORS
Established 1969
Buxton Road, Bakewell, Derbyshire, DE45 1HZ
TEL: 01629 812722 FAX: 01629 814390
www.smithandroper.com

Project Title:
WHITEHOUSE FARM
IRETON WOOD

Drawing Title:
PROPOSED RETAINING WALL & EXTERNAL STAIRCASE DETAIL

Drawn/Check: **GRLS-TCS-DS**	
First Issue: **MAY 2025**	RIBA Stage: **2**
Current Issue: **MARCH 2026**	Scale: **1:10 at A1**
Drawing Number: **1160-346**	Revision: **A**