TO ACCOMPANY APPLICATION: AVA/2026/0137

Parsons Cottage Summerhouse proposed floor plan
1:50 scale

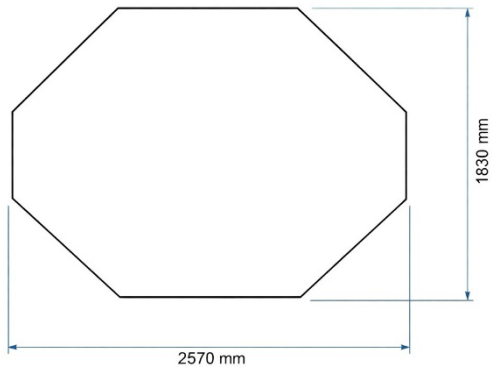

Parsons Cottage Summerhouse proposed elevation
1:50 scale

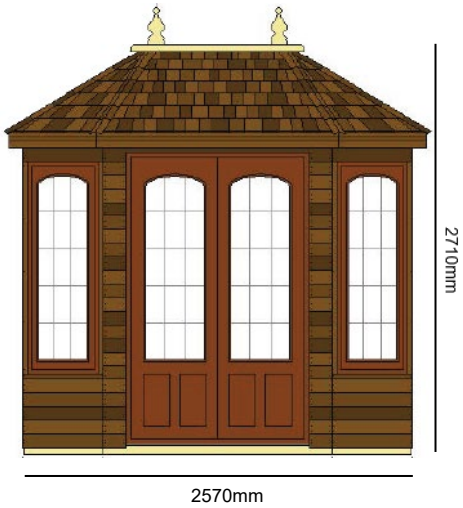

PROPOSED FRONT ELEVATION

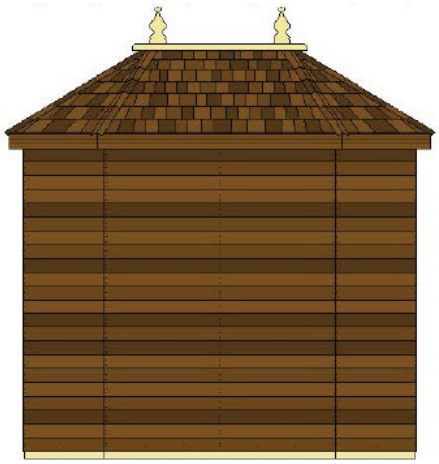

PROPOSED BACK ELEVATION



PROPOSED RIGHT SIDE ELEVATION



PROPOSED LEFT SIDE ELEVATION