RadonAway®
The world's leading radon fan manufacturer

RPi Series



Radon Mitigation Fan

All RadonAway® fans are specifically designed for radon mitigation. RPi Series Fans provide superb performance, run ultra-quiet and are attractive. They are ideal for most sub-slab radon mitigation systems.

Features

- Energy efficient
- Ultra-quiet operation
- Meets all electrical code requirements
- Water-hardened motorized impeller
- Seams sealed to inhibit radon leakage (RP145i double snap sealed)
- ETL Listed - for indoor or outdoor use
- Thermally protected motor
- Rated for commercial and residential use

FAN MODEL	P/N	INLET/ OUTLET	WATTS	MAX. OPERATING PRESSURE	TYPICAL M³/min vs. STATIC PRESSURE Pa							
					0 Pa	62 Pa	125 Pa	187 Pa	250Pa	312 Pa	375 Pa	412 Pa
RP145i	28403	115mm (OD)	53-75	270Pa	4.70	4.02	3.37	2.55	1.74	.62	-	-
RP265i	28404	150mm (OD)	68-107	330Pa	8.01	6.94	5.80	5.10	4.30	2.83	1.61	0

Intertek 77728

Certified to:
2006/95/EC (LVD)
2006/42/EC (LVD)
2004/108/RC (EMC)

Model	A	B	C
RP145	4.5" (114.3mm)	9.7" (246.4mm)	8.5" (215.9mm)
RP265	6" (152.4mm)	11.75" (298.5mm)	8.6" (218.4)

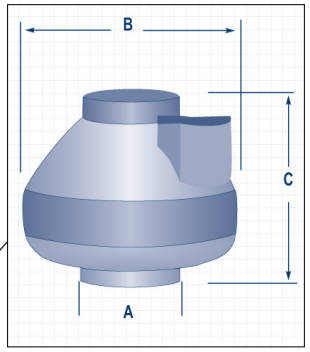



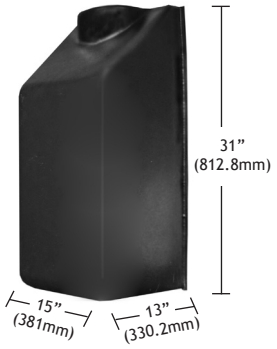

Outdoor Fan Cover

RadonAway® fan covers create a clean, attractive look for an exterior-mounted radon fan. Fan covers have a 4" (101.60mm) cutout and come in white and black options.