GATE/FENCE DETAIL AND PROPOSED PARKING AND FIELD SITES -AVA/2024/0418 - A Clark-Maxwell

Gate into dog field
Five bar galvanised steel gate with half mesh. 3.10 meters long, see diagram and photo

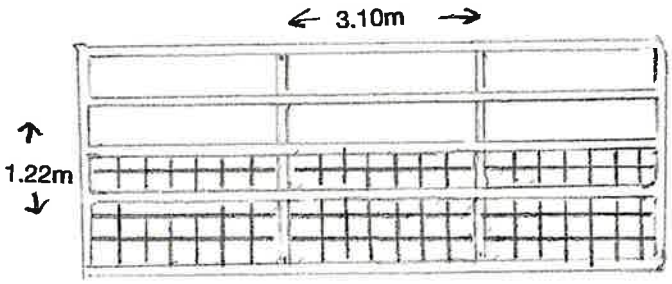



Detail of fencing

Galvanised steel stock fencing. 1.829 meters high. Secured to wooden posts placed 2.5 meters apart. See diagram of fence and posts

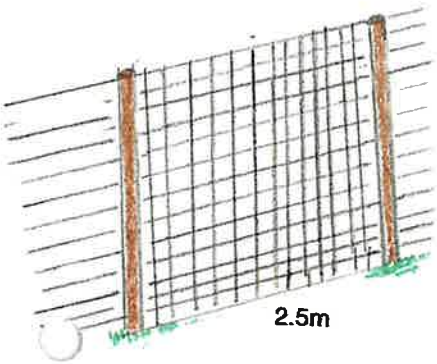

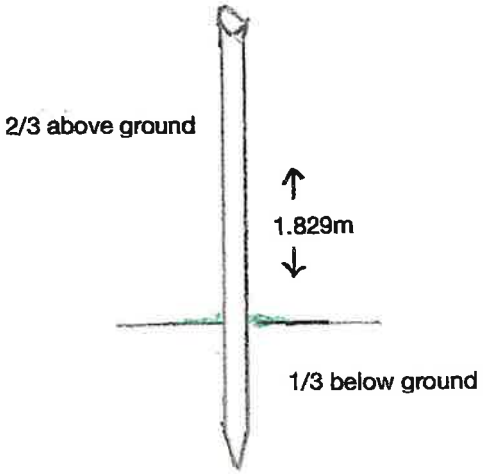

Rolled steel wire squares, 7.2cm wide forming panels up to 1.829 high. High strength and in keeping with existing stock fencing adjacent to bridlepath. Dog and all livestock proof.



