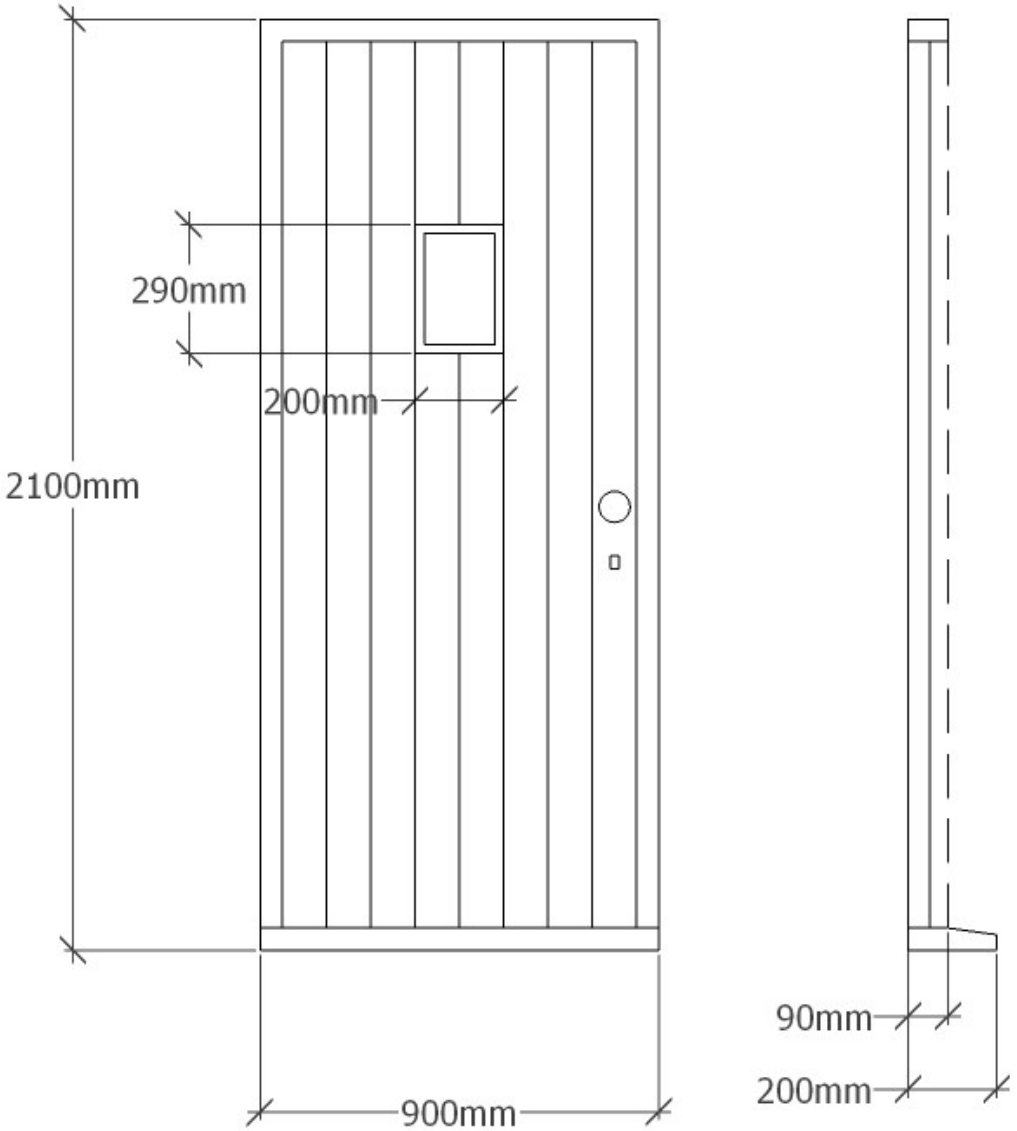

Proposed Front Door
59 Tamworth St, Duffie
Drawing FD1