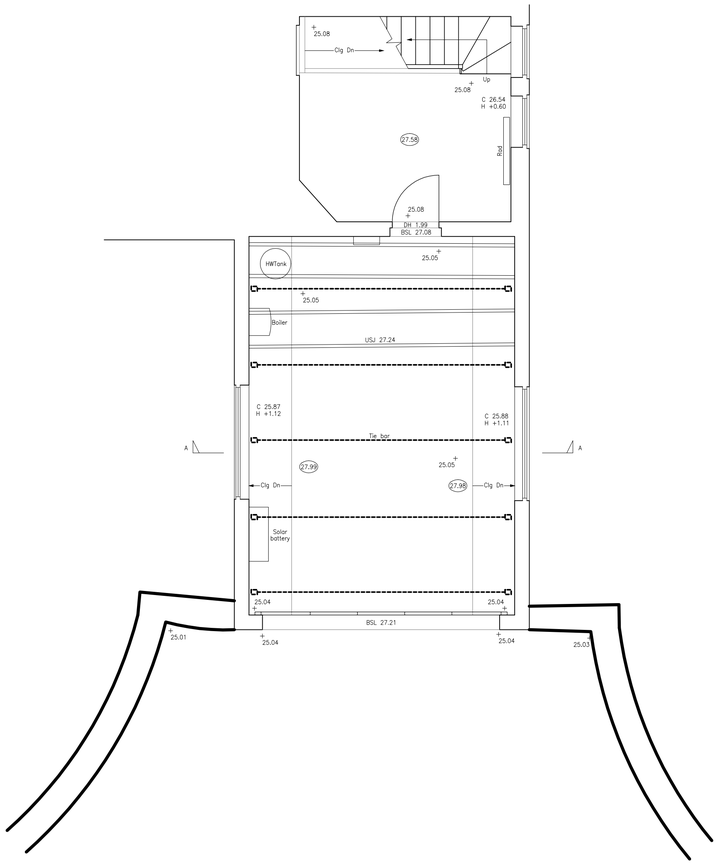

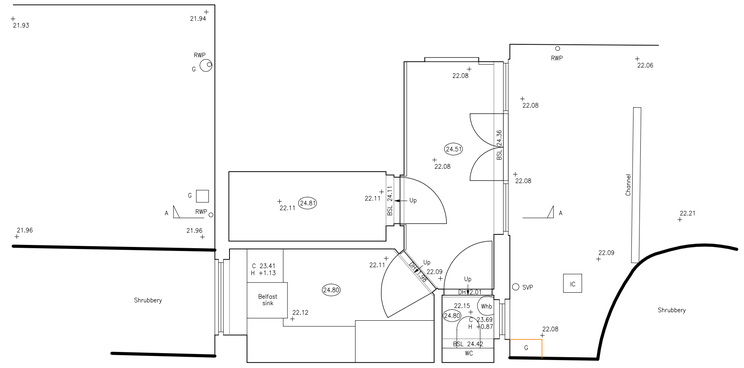

KEY :

MH	Man–hole
IC	Inspection Chamber
G	Gully
LP	Lamp–post
RNP	Road Nameplate
SV	Stop Valve
WM	Water Meter
BTIC	British Telecom IC
CATV	Cable TV IC
TP	Telegraph Pole
FH	Fire Hydrant
C/L	Chain–link fence
C/B	Close–boarded fence
O/B	Open–boarded fence
M/R	Metal railings
BrW	Brick wall
BrS	Brick setts
CPS	Concrete paving slabs
ToTW	Top of wall level
Shr	Shrubbery
JB	Junction box
Whb	Wash hand basin
RWP	Rain water pipe
SVP	Soil vent pipe
A/B	Air brick

TREES

G	Trunk circumference
mb	multi–boled
S	Spread (Diameter)
H	Height (Estimate)
Pol	Pollarded

▲ S104 Survey station

Approximate North

Level Datum : Arbitrary Local Datum

1:50

1m 0 1m 2m 3m 4m 5m

Scale bar

PLEASE NOTE: THESE DRAWINGS ARE FOR INFORMATION AND MUST NOT BE USED FOR CONSTRUCTION

This drawing, electronic file & content is copyright of the designer. All rights reserved. You may not, except with our express written permission, copy, distribute or commercially exploit the content. Nor may you transmit it or store it in a website or other form of electronic retrieval system.

Do not scale from this drawing. All dimensions to be checked onsite prior to commencement of works.

Derbyshire Land & Building Surveys

Paper Scale Check 0 10 20 50 mm

SURVEY DRAWINGS

client
Norbert Arndt

drawing scale
1:50 @A1

location
6, The Pastures
Duffield, DE56 4EX

date
May 2026

drawing name
Existing Floor-Plans

drawing number
DLB2681-01

revision
Original

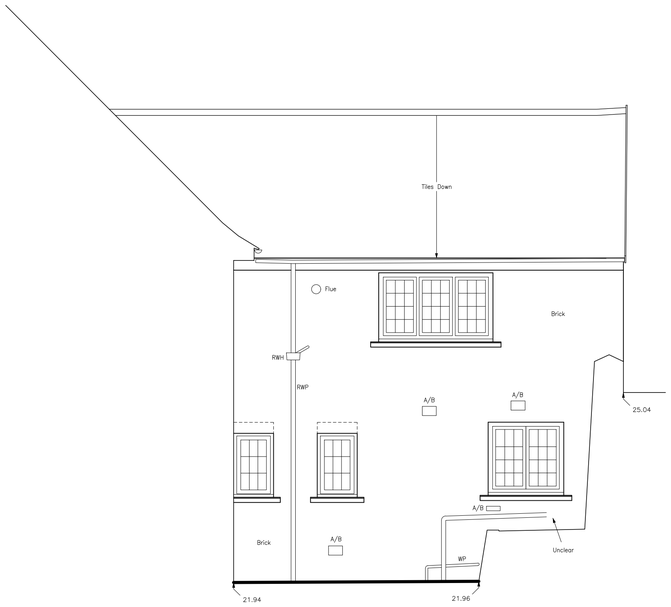

DATUM 20.000m

SOUTH–EAST ELEVATION

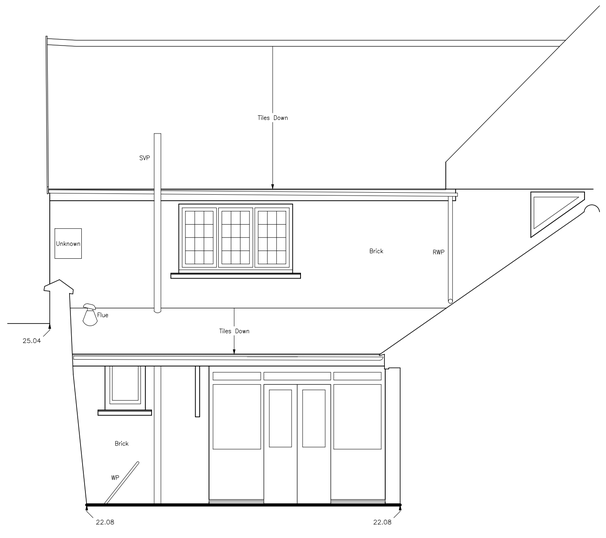

DATUM 20.000m

NORTH–WEST ELEVATION

KEY :

MH	Man–hole
IC	Inspection Chamber
G	Gully
LP	Lamp–post
RNP	Road Nameplate
SV	Stop Valve
WM	Water Meter
BTIC	British Telecom IC
CATV	Cable TV IC
TP	Telegraph Pole
FH	Fire Hydrant
C/L	Chain–link fence
C/B	Close–boarded fence
O/B	Open–boarded fence
M/R	Metal railings
BrW	Brick wall
BrS	Brick setts
CPS	Concrete paving slabs
ToTW	Top of wall level
Shr	Shrubbery
JB	Junction box
JB	Junction box
Whb	Wash hand basin
RWP	Rain water pipe
SVP	Soil vent pipe
A/B	Air brick

TREES

G	Trunk circumference
mb	multi–boled
S	Spread (Diameter)
H	Height (Estimate)
Pol	Pollarded

△ S104 Survey station

Level Datum : Arbitrary Local Datum

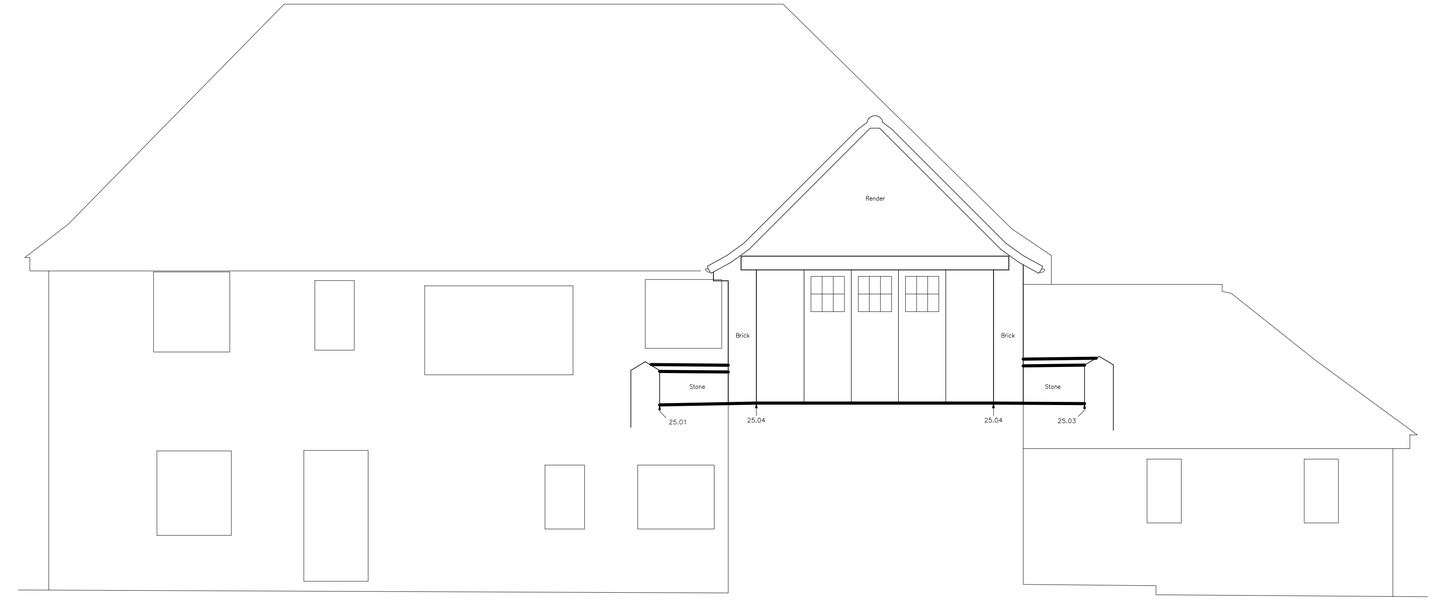

DATUM 20.000m

NORTH–EAST ELEVATION

1:50

1m 0 1m 2m 3m 4m 5m

Scale bar

PLEASE NOTE: THESE DRAWINGS ARE FOR INFORMATION AND MUST NOT BE USED FOR CONSTRUCTION

This drawing, electronic file & content is copyright of the designer. All rights reserved. You may not, except with our express written permission, copy, distribute or commercially exploit the content. Nor may you transmit it or store it in a website or other form of electronic retrieval system.
Do not scale from this drawing. All dimensions to be checked onsite prior to commencement of works.

Derbyshire Land & Building Surveys

0 10 20 50 mm Paper Scale Check

SURVEY DRAWINGS

client
Norbert Arndt

drawing scale
1:50 @A1

location
6, The Pastures
Duffield, DE56 4EX

date
May 2026

drawing name
Existing Elevations

drawing number
DLB2681-02

revision
Original

KEY :

MH	Man–hole
IC	Inspection Chamber
G	Gully
LP	Lamp–post
RNP	Road Nameplate
SV	Stop Valve
WM	Water Meter
BTIC	British Telecom IC
CATV	Cable TV IC
TP	Telegraph Pole
FH	Fire Hydrant
C/L	Chain–link fence
C/B	Close–boarded fence
O/B	Open–boarded fence
M/R	Metal railings
BrW	Brick wall
BrS	Brick setts
CPS	Concrete paving slabs
ToTW	Top of wall level
Shr	Shrubbery
JB	Junction box
Whb	Wash hand basin
RWP	Rain water pipe
SVP	Soil vent pipe
A/B	Air brick

TREES

G	Trunk circumference
mb	multi–boled
S	Spread (Diameter)
H	Height (Estimate)
Pol	Pollarded

⚠ S104	Survey station

Level Datum : Arbitrary Local Datum

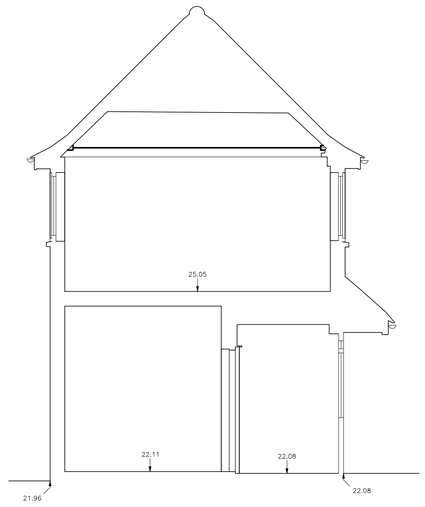

DATUM 20.000m

SECTION A

1:50

1m 0 1m 2m 3m 4m 5m

Scale bar

Derbyshire Land & Building Surveys

SURVEY DRAWINGS

Paper Scale Check 0 10 20 50 mm

client
Norbert Arndt

drawing scale
1:50 @A1

location
6, The Pastures
Duffield, DE56 4EX

date
May 2026

drawing name
Existing Sections

drawing number
DLB2681-03

revision
Original

PLEASE NOTE: THESE DRAWINGS ARE FOR INFORMATION AND MUST NOT BE USED FOR CONSTRUCTION

This drawing, electronic file & content is copyright of the designer. All rights reserved. You may not, except with our express written permission, copy, distribute or commercially exploit the content. Nor may you transmit it or store it in a website or other form of electronic retrieval system.
Do not scale from this drawing. All dimensions to be checked onsite prior to commencement of works.