TECHNICAL DATA SHEET

RDX EXT 89x1550-T4.5 SCREW

Load Capacity	N/A*
Overall Length	1550 mm
Weight	18 kg (±8%)
Materials	Tube • 89 x 4.5 x 1550 mm • Continuous Weld Helix • Grade S235
Coupling	2 no. M20x100 Bolts/Nuts
Surface	Hot-dip Galvanised Steel, according to BS EN ISO 1461:2009

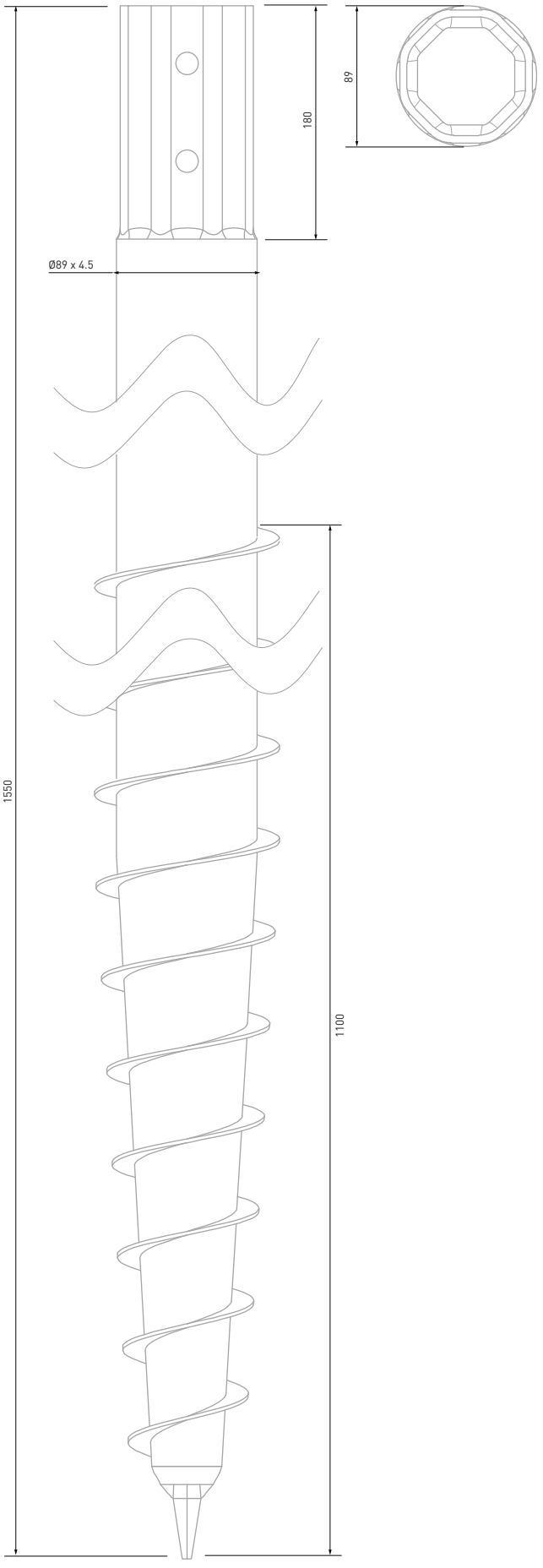

Subject to technical change.

* RADIX Screw Piles must be selected based on static calculations and results of site-specific ground testing. The manufacturer is not liable for damage caused by insufficient or incorrect selection of screw piles.

© 2023 RADIX • RDXEXT411 V3.0

TECHNICAL DATA SHEET

RDX EXT 89x2050-T4.5 SCREW

Load Capacity	N/A*
Overall Length	2050 mm
Weight	23 kg (±8%)
Materials	Tube • 89 x 4.5 x 2050 mm • Continuous Weld Helix • Grade S235
Coupling	2 no. M20x100 Bolts/Nuts
Surface	Hot-dip Galvanised Steel, according to BS EN ISO 1461:2009

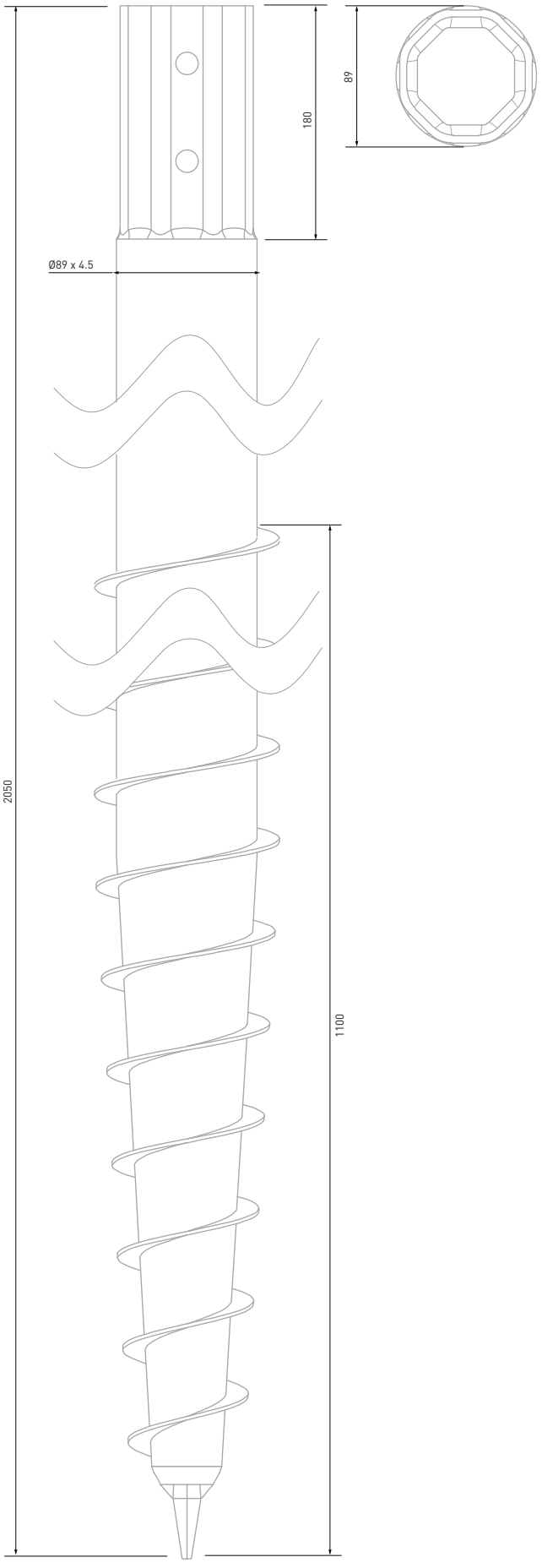

Subject to technical change.

* RADIX Screw Piles must be selected based on static calculations and results of site-specific ground testing. The manufacturer is not liable for damage caused by insufficient or incorrect selection of screw piles.

© 2023 RADIX • RDXEXT412 V3.0

TECHNICAL DATA SHEET

RDX EXT 89x1000-T4.5 HELICAL EXTENSION

Load Capacity	N/A*
Overall Length	1000 mm Net: 820 mm
Weight	12 kg (±8%)
Materials	Tube • 89 x 4.5 x 1000 mm • Grade S235 Helix • 200 mm Diameter • 8 mm Thick
Coupling	2 no. M20x100 Bolts/Nuts
Surface	Hot-dip Galvanised Steel, according to BS EN ISO 1461:2009

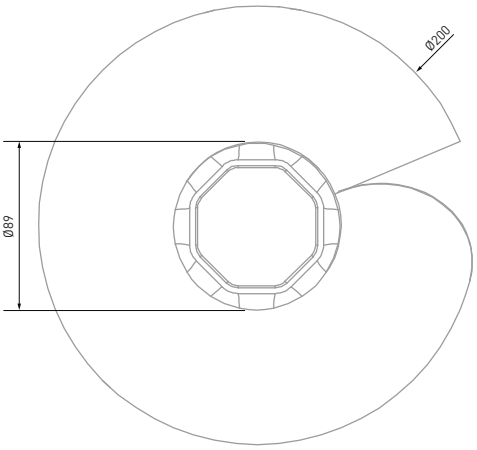

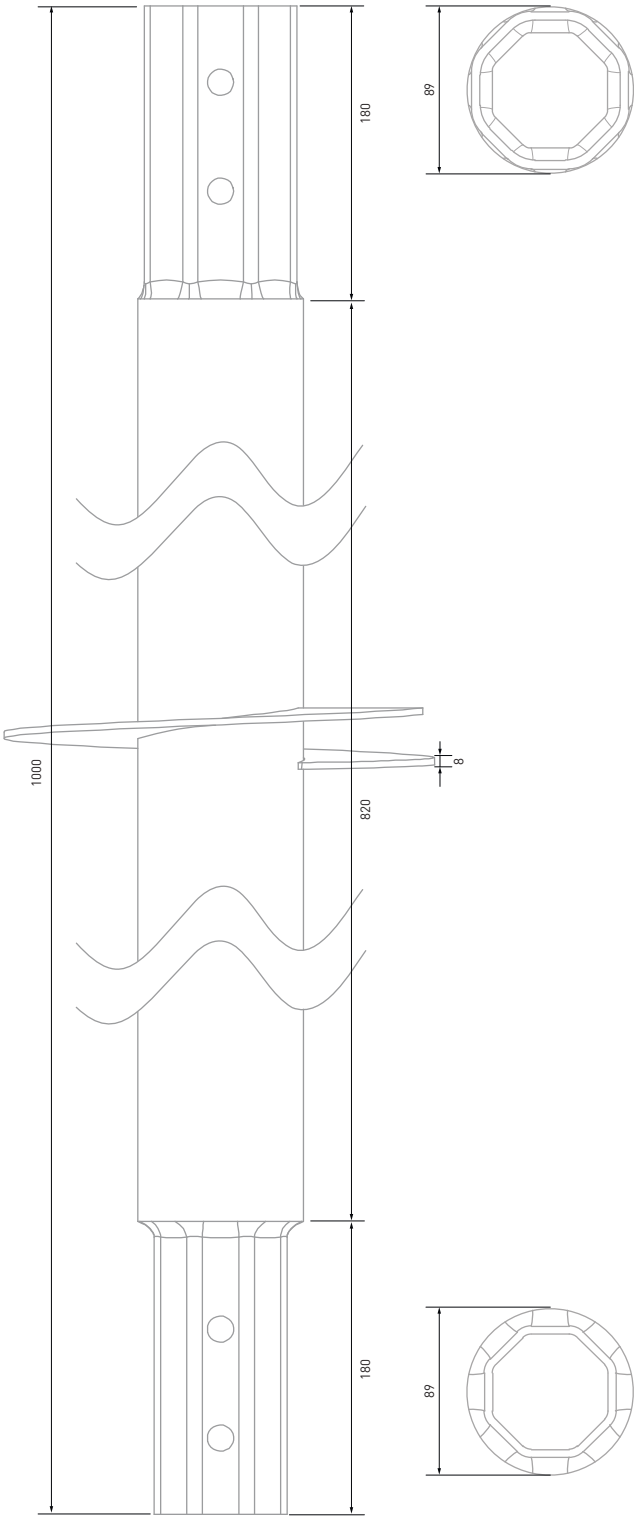

Subject to technical change.

* RADIX Screw Piles must be selected based on static calculations and results of site-specific ground testing. The manufacturer is not liable for damage caused by insufficient or incorrect selection of screw piles.

© 2023 RADIX • RDXEXT413H V3.0

TECHNICAL DATA SHEET

RDX EXT 89x1000-T4.5 EXTENSION

Load Capacity	N/A*
Overall Length	1000 mm Net: 820 mm
Weight	10 kg (±8%)
Materials	Tube • 89 x 4.5 x 1000 mm • Grade S235
Coupling	2 no. M20x100 Bolts/Nuts
Surface	Hot-dip Galvanised Steel, according to BS EN ISO 1461:2009



Subject to technical change.

* RADIX Screw Piles must be selected based on static calculations and results of site-specific ground testing. The manufacturer is not liable for damage caused by insufficient or incorrect selection of screw piles.

© 2023 RADIX • RDXEXT413 V3.0

TECHNICAL DATA SHEET

RDX EXT 89x1500-T4.5 EXTENSION

Load Capacity	N/A*
Overall Length	1500 mm Net: 1320 mm
Weight	15 kg (±8%)
Materials	Tube • 89 x 4.5 x 1500 mm • Grade S235
Coupling	2 no. M20x100 Bolts/Nuts
Surface	Hot-dip Galvanised Steel, according to BS EN ISO 1461:2009

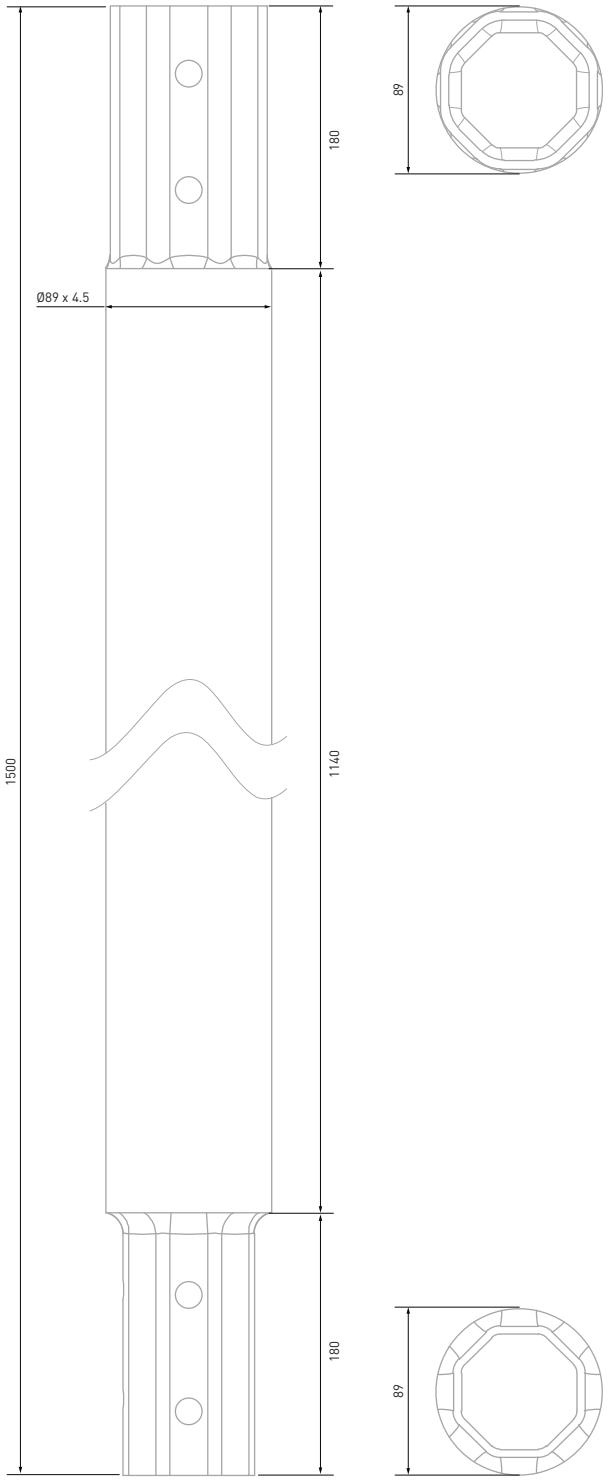

Subject to technical change.

* RADIX Screw Piles must be selected based on static calculations and results of site-specific ground testing. The manufacturer is not liable for damage caused by insufficient or incorrect selection of screw piles.

© 2023 RADIX • RDXEXT414 V3.0

TECHNICAL DATA SHEET

RDX EXT 89x2000-T4.5 EXTENSION

Load Capacity	N/A*
Overall Length	2000 mm Net: 1820 mm
Weight	20 kg (±8%)
Materials	Tube • 89 x 4.5 x 2000 mm • Grade S235
Coupling	2 no. M20x100 Bolts/Nuts
Surface	Hot-dip Galvanised Steel, according to BS EN ISO 1461:2009

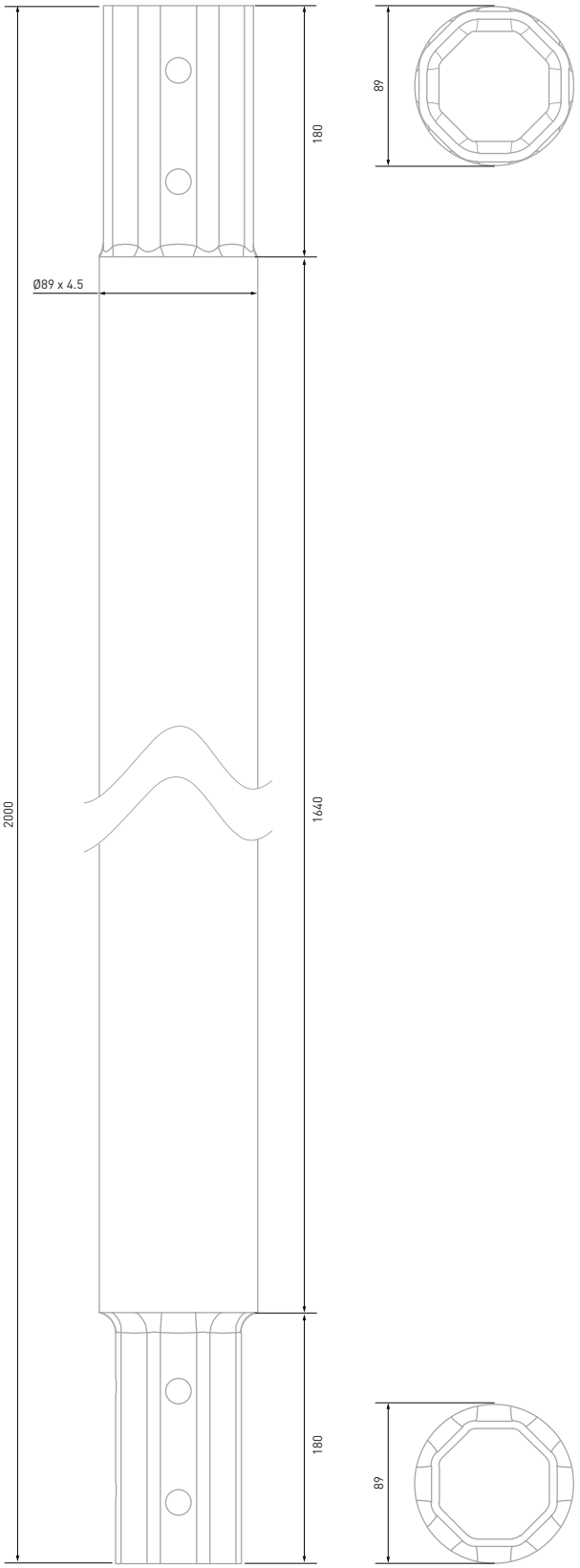

Subject to technical change.

* RADIX Screw Piles must be selected based on static calculations and results of site-specific ground testing. The manufacturer is not liable for damage caused by insufficient or incorrect selection of screw piles.

© 2023 RADIX • RDXEXT415 V3.0