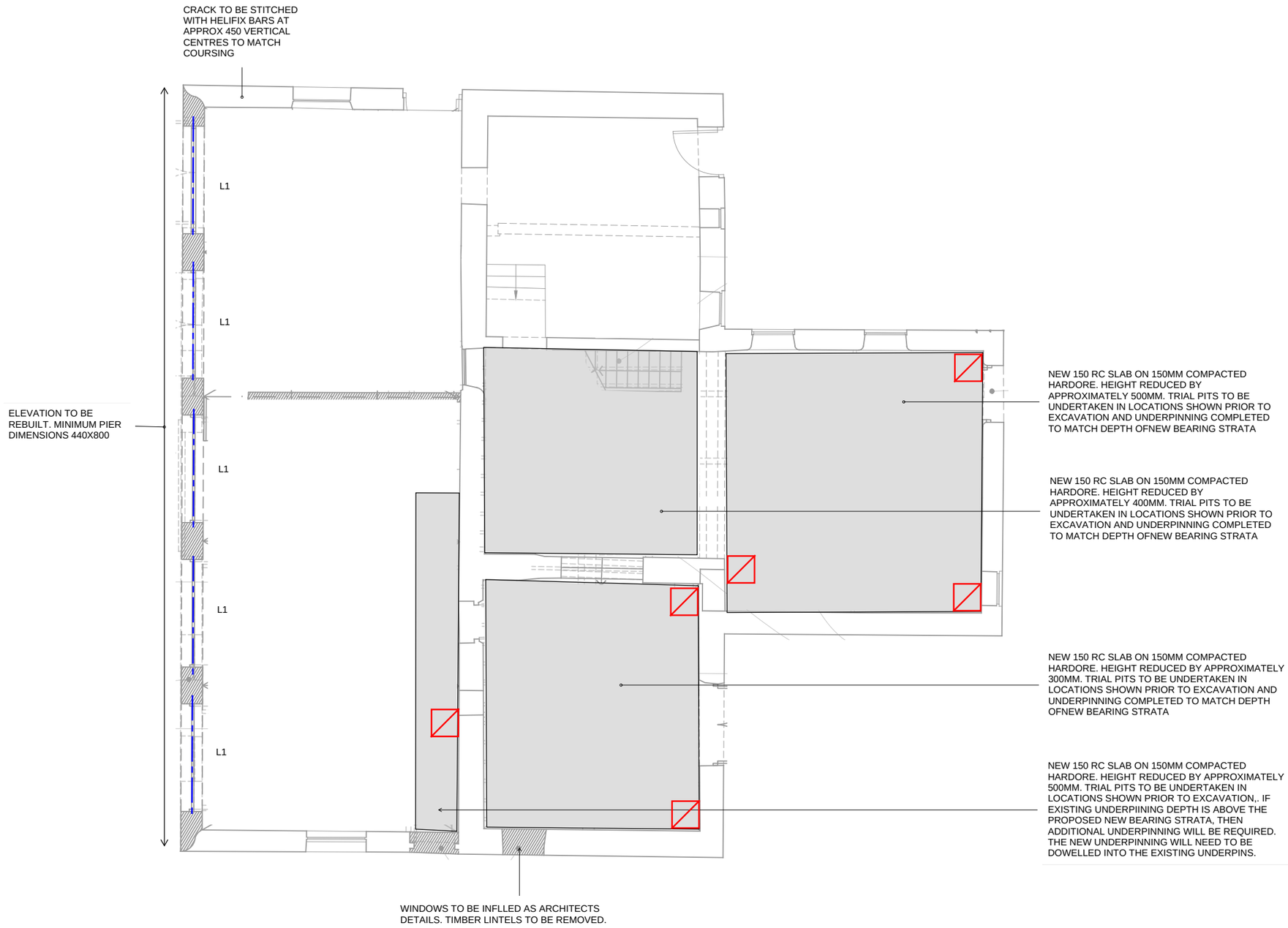

HEALTH AND SAFETY

In addition to the hazards/ risks normally associated with the types of work detailed on this drawings, note the following:

CONSTRUCTION

1. All normal precautions for lateral stability, temporary works, trench supports etc. are to be designed and coordinated by the Contractor, seeking advice from GCA if required.

L1 NEW D24 OAK LINTELS , 75MM HIGH X 150MM WIDE OR TO FULL WIDTH OF WALL FOR DETAILING PURPOSES

ALL MASONRY TO BE REPOINTED WITH A COLOUR MATCHED NHL2 MORTAR

GCA

CONSULTING CIVIL, STRUCTURAL, HIGHWAY AND TRANSPORTATION ENGINEERS

OFFICES AT DERBY, LEICESTER & WARWICK

GCA (UK) Ltd, ST HELEN'S HOUSE, KING STREET, DERBY DE1 3EE.
TEL 01332 362411. E-MAIL derby@gca-consulting.com

Client: MIKE BRETT

Project: LEA HALL

Document Reference: 11553 - GCA - XX - XX - DR - S - SK01 - S04 - P01
(Project No - Origin - Zone - Level - Type - Role - Dwg No - Status - Rev)

Title: BARN DRAWINGS- GROUND FLOOR

GCA Project No: 11553

Scale: NTS

Purpose: FOR INFORMATION

Rev	Description	Date	Drawn	Chk'd	Appv'd
P01	FOR INFORMATION	26.06.26	BR	JT	JT

DO NOT SCALE FROM DRAWINGS.

All dimensions to be checked on site by Contractor prior to fabrication and construction.

The Contractor is responsible for ensuring the temporary stability of the structure at all times, including temporary works design, installation and maintenance.

Construction from these drawings must not start until a Principal Designer has been appointed and completed their relevant duties.

TEC004_V2.2_A3Landscape DB_Review Due 010325

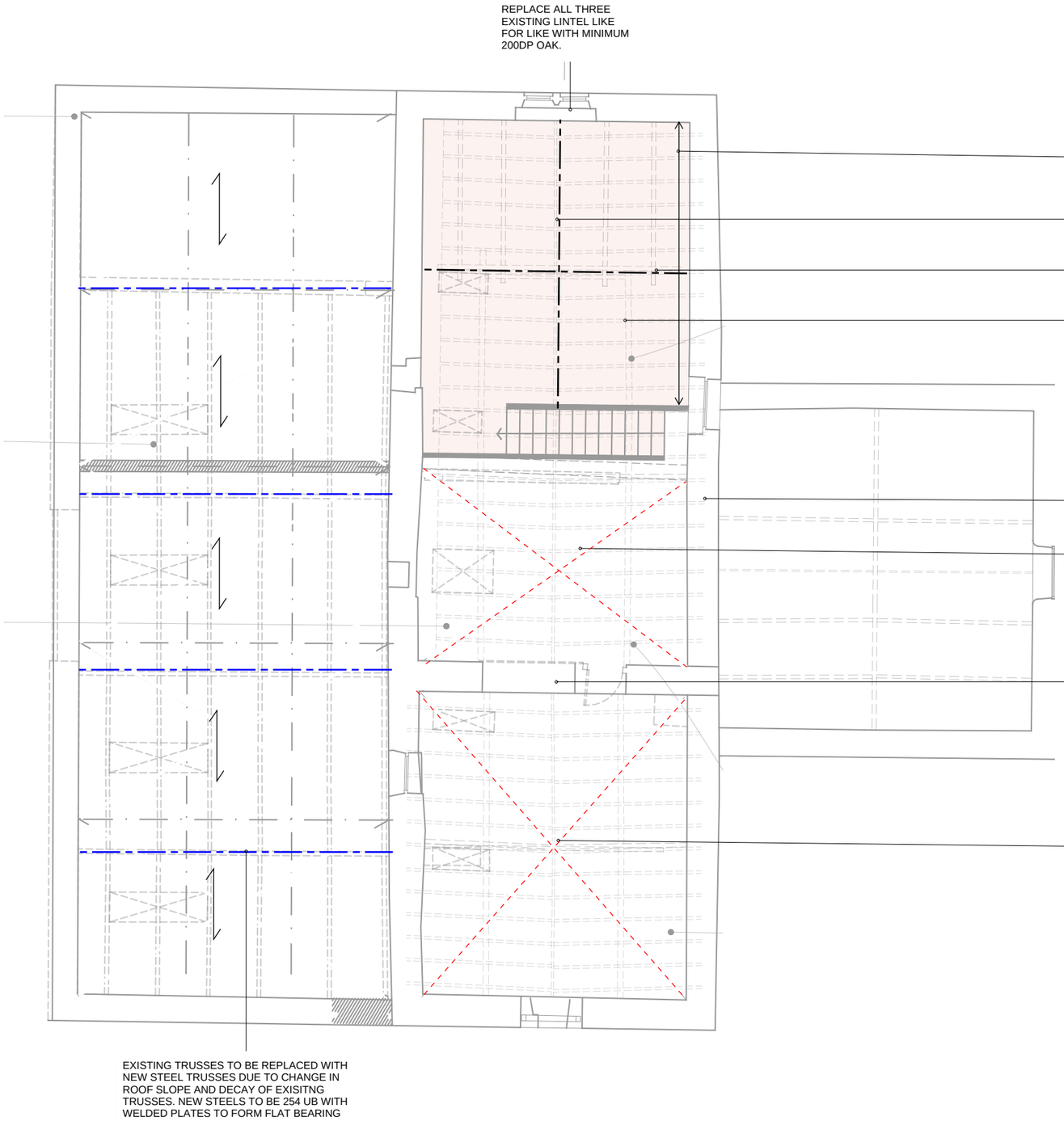

HEALTH AND SAFETY

In addition to the hazards/ risks normally associated with the types of work detailed on this drawings, note the following:

CONSTRUCTION

1. All normal precautions for lateral stability, temporary works, trench supports etc. are to be designed and coordinated by the Contractor, seeking advice from GCA if required.

SPAN OF 50X200 C24 RAFTERS AT 900 CENTRES (OR REDUCED TO SUIT ROOF COVERING OR PV INSTALLATION

ALL RETAINED EXISITNG STEELWORK TO BE WIRE BRUSHED AND REPAINTED TO A C1 ENVIROMENT CLASS

ALL MASONRY TO BE REPOINTED WITH A COLOUR MATCHED NHL2 MORTAR

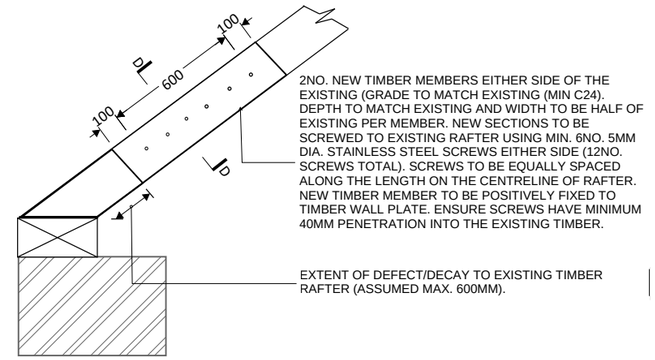

DETAIL A- DECAYED RAFTER END REPAIR

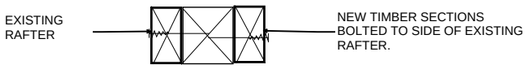

SECTION D

GCA
CONSULTING CIVIL, STRUCTURAL, HIGHWAY AND TRANSPORTATION ENGINEERS
OFFICES AT DERBY, LEICESTER & WARWICK
GCA (UK) Ltd, ST HELEN'S HOUSE, KING STREET, DERBY DE1 3EE.
TEL 01332 362411. E-MAIL derby@gca-consulting.com

Client: MIKE BRETT

Project: LEA HALL

Document Reference: 11553 - GCA - XX - XX - DR - S - SK01 - S04 - P01
(Project No - Origin - Zone - Level - Type - Role - Dwg No - Status - Rev)

Title: BARN DRAWINGS- FIRST FLOOR

GCA Project No 11553 | Scale NTS | Purpose FOR INFORMATION

Rev	Description	Date	Drawn	Chk'd	Appv'd
P01	FOR INFORMATION	26.06.26	BR	JT	JT

DO NOT SCALE FROM DRAWINGS.

All dimensions to be checked on site by Contractor prior to fabrication and construction.

The Contractor is responsible for ensuring the temporary stability of the structure at all times, including temporary works design, installation and maintenance.

Construction from these drawings must not start until a Principal Designer has been appointed and completed their relevant duties.