Architect Studio Gedye Ltd

Lea Hall

Window Options Appraisal

Project no. 25007

Job name
Lea Hall

Site Address
Lea Hall
Main Road
Upper Lea
Matlock
Derbyshire
DE4 5GR

Date of issue
11/08/26

Revision
A

Author
SM - Architect Studio Gedye

Checked by
SG, SM - Architect Studio Gedye

studiogedye

Contents

Introduction 3

- Background and Methodology
- Historical Development and Significance
- Consultation Feedback
- Further Considerations

Existing Rear (South) Elevation - 2026 4

Baseline Proposals 5

Option 1 6

Option 2 8

Option 3 10

Option 4 12

Summary 14

Introduction

Background and Methodology

This options appraisal has been prepared to assess the proposed replacement of existing rear (south) elevation windows at the Grade II* Lea Hall, following consultation with Amber Valley Borough Council and Historic England. It is submitted as supplementary information to support the application for planning and listed building consent and should be should be read alongside the other application documents. The purpose of this appraisal is to demonstrate that the preferred option has been selected through a proportionate assessment process.

The initial proposals submitted for consent were to retain and repair all existing windows of high significance, and replace all poor quality windows of low significance that are beyond their serviceable life with triple-glazed aluminium windows. The majority of the proposed replacement windows are on the southern (rear) elevation of Lea Hall. Replacement windows were also proposed to the adjoining cottage to the east, however these have now been removed from the application, with the existing to be retained and repaired in situ.

Four potential approaches have been developed in response to the statutory feedback. These are evaluated to identify an appropriate heritage-led solution that balances the conservation of the building's special architectural and historic interest whilst delivering a sustainable and technically appropriate outcome.

Each option has been assessed consistently, considering the affect of each option on significance; thermal performance and airtightness; maintenance and longevity to discuss the most appropriate long-term solution. Each option is drawn as both the whole south elevation and isolated in detail - in plan, section and elevation. A typical single mullion stone window has been chosen to test each option with both fixed and opening lights, as it allows us to test all variables.

Historical Development and Significance

Differing assessments of historical development and significance have been provided - firstly in the Heritage Statement submitted with the application and secondly by the local authority Conservation Officer. For the purposes of this appraisal we will *reference the Conservation Officer's assessment dated 04/06/2026*.

Historical and fabric evidence suggests the southern rear 'service' range of Lea Hall is the original house known as 'Town Head House', *recorded in 1678 as quite a small house, of only two bays: "All That Parlour and Chamber over it and the kitchinge at the east end of that messuage'.* Through dating the features in-situ and the architectural style, the addition of the northern front range of Lea Hall is assessed to date from 1690-1727.

The addition of the brick flanking wings to the front range and the extensive remodelling of the rear range - raising from two storeys to three storey, installation of the stair, and re-fenestration is assessed to have been undertaken by Peter Nightingale in 1754. *This was thought to unify the various window and door openings, and changes in level by inserting flush mullions / and re-facing part of the elevations.*

As of 2026 *the staircase window retains leaded lights to two of the three openings, and at ground floor two pairs of small-paned sashes remain - typical of the early 19th century sashes found in Cromford and still retain their pegged construction*. Some historical glass is still present in these windows. *There is also evidence of the vertical saddle bars for leaded lights for a number of the windows.*

The southern rear elevation is assessed as significant for its historical development (incorporating different phases) and the aesthetic approach to the re-fenestration of this part in 1754. The remaining historic windows are of historical (archaeological) significance.

Consultation Feedback

AVBC Conservation Officer:

"The purpose of unifying the rear elevation in 1754 will be harmed by ad-hoc alterations or a contemporary window style which does not reflect the historic leaded lights or the later timber ones...

...The option of restoring leaded lights to the majority of the main part of the house could be considered and would be justifiable. We would not consider this a pastiche, rather an informed restoration.

A full review is needed to assess the appropriate design response to the elevations, bearing in mind the historic evidence that this was intended to be a unified elevation, blending previous phases into one, so a unified appearance is desirable but not absolutely essential.

Based on the fact that only certain opening windows would have had a metal / iron opening casements, and that the leaded lights would have been direct fixed to the masonry, it may be possible, for example, to direct glaze into the masonry without a metal sub-frame - options could be explored using vacuum glazing....

...alternatives such as vacuum glazing are likely to have less impact provided that they are finished putty glazed. The use of opening casements also increases the overall dimensions of these windows. Further exploration of options should inform the application including a comparison of restoration of leaded lights, or of new frames with sections in steel, aluminium, bronze and timber, and bespoke blacksmith fabrication."

Consultation Feedback (continued)

Historic England:

As we understand from the information submitted, there are original leaded windows that remain. There are also a number of sash windows that are thought to date to the 18th century. The windows include historic glass which contributes to the character, and historic and architectural value of the house. The retention of these windows is valuable to preserving the building's significance.

It was clear from the site visit that three sets of windows line the rear elevation. These consist of the original leaded window, the sash windows and the more recent additions. This contributes to an interesting and unique appearance across the elevation that has developed since the original construction of Lea Hall, and which contributes to the buildings aesthetic significance. It is important that this is understood and considered in any forthcoming proposals.

Further Considerations

The replacement windows must meet the functional requirements of the Building Regulations and rooms must maintain sufficient provision for fire escape and ventilation via the use of opening lights. Not all windows will need to be open-able and fixed windows will be given preference wherever possible for their slimmer sight lines, better thermal performance and economy.

Whilst a relaxation can be granted for Part L of the Building Regulations, this is not desirable. In light of the climate emergency and severely limited opportunities for thermal upgrades to the listed building, these replacement windows represent a meaningful opportunity improve thermal performance, occupant comfort and long-term conservation for the current and future generations. This will be given great weight alongside the other considerations.

Existing Rear (South) Elevation - 2026



Key

- C18 (?) Leaded Lights
- C19 timber 'Cromford' sashes, pegged construction
- C20 timber casements/sashes, poor condition
- Timber doors (no alterations), undated
- C20 steel 'Critall-style' window

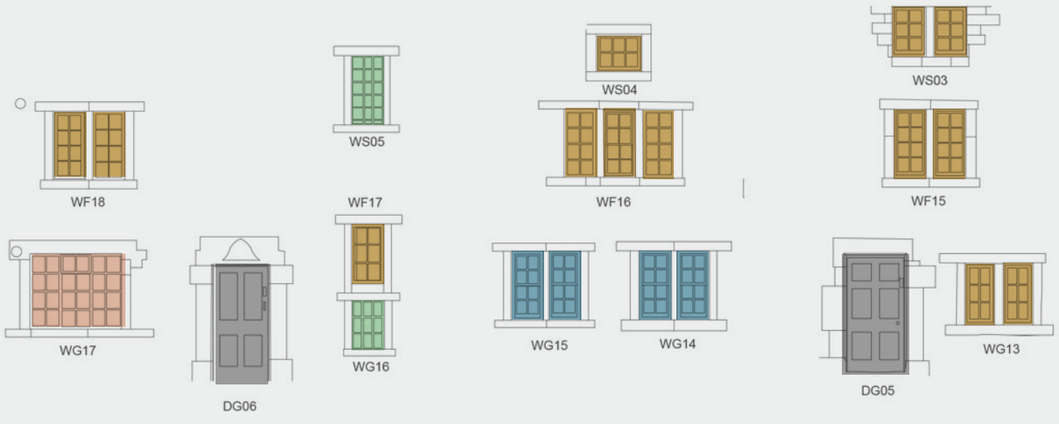



Repair existing leaded lights (high significance) - WS05 & WG16

Remove poor quality Victorian timber casements throughout (less significant)

Reinstate leaded light and stanchions to complete 'stairwell' group of windows

Reinstate mullioned window opening based on the other windows proportions 'Restoration' with matching course gritstone infill and lime mortar.

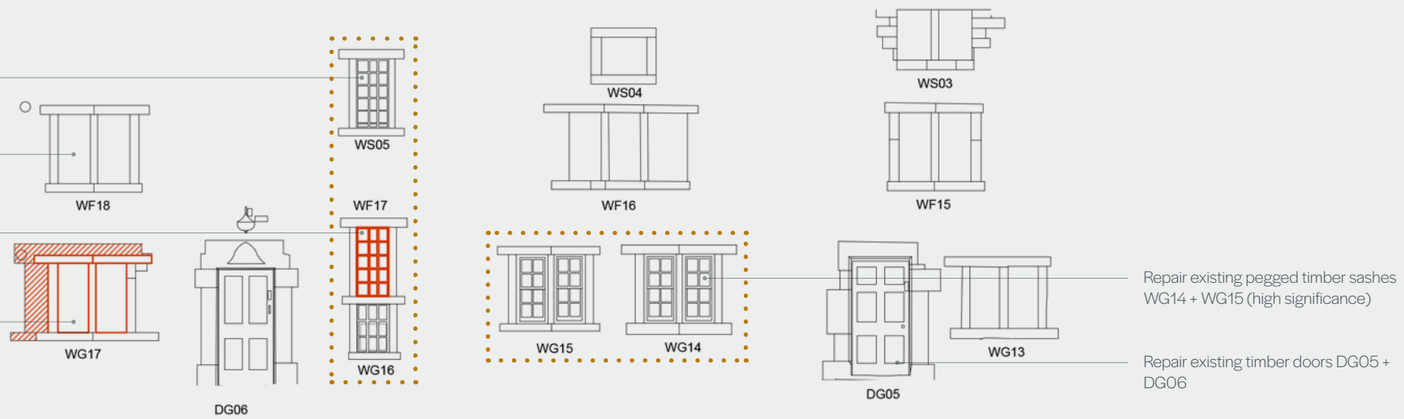

Repair existing pegged timber sashes WG14 + WG15 (high significance)

Repair existing timber doors DG05 + DG06

Option 1: Timber sash windows with vacuum glazing - Detail

Discussion

This option explores the use of timber framed windows. The proposal is for bespoke joiner-made pegged timber sash windows with vacuum glazed units to replicate the existing early 19th century 'Cromford' sash windows.

With this option all windows would match apart from the stairwell leaded lights, where the existing subdivision would also echo the sashes albeit at a smaller scale. Visually this would provide unified elevation of subdivided windows.

Significance

The existing 'Cromford' sashes post-date the 1754 remodelling of the of the rear elevation and are a locally significant historical design. It is possible the majority of windows on this elevation were once pegged 'Cromford' sashes before the current windows were introduced. Whilst this option would create a unified appearance based on some existing physical evidence, it would be speculative restoration to a particular period of history.

Thermal Performance

Reasonable thermal performance could be achieved through the use of vacuum glazed units, although these have a minimum unit size of 200x200mm or 300mm diagonal. The sash window proportions, frame thickness's and rebates would need to be designed around these minimum parameters. Seals would need to be used to maintain airtightness, likely brush-seals set in carrier beads routed into the timber frames.

Maintenance

High standard of workmanship, detailing and timber specification will go a long way to extend the life and reduce maintenance regimes. Linseed putty fillets and linseed paint would need to be regularly inspected and maintained on an annual basis, especially given this is a south-facing elevation subject to the prevailing weather, UV and most temperature fluctuations.

Outline Specification

- Timber - Douglas Fir or hardwood such as Oak or Sapele.
- Glazing - Vacuum glazed units with discrete evacuation ports (Passivglas Linear, 0.5W/m^{2}K) bedded in Hodgson Heritage Putty, finished with traditional linseed putty fillets.
- Paint: Linseed oil paint to match existing
- Pointing - well haired lime mortar, with a burnt sand mastic fillet between stone and timber.

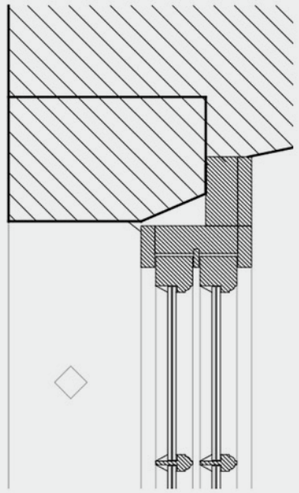

Frame Details



Elevation

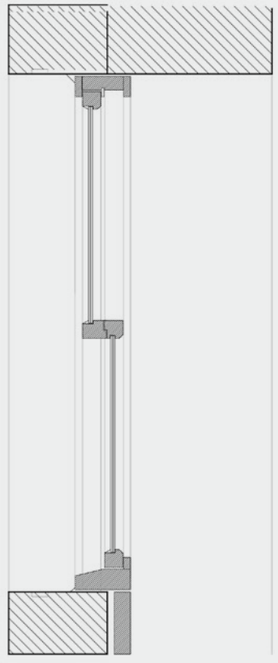

Section

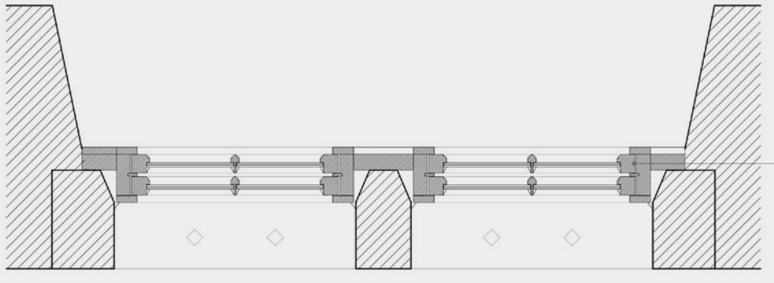

Plan

Both sashes can open
(note - at least one to be opening per room)

Option 1: Timber sash windows with vacuum glazing - Elevation Study



Option 2: Leaded lights with secondary glazing internally - Detail

Discussion

This option explores the restoration of leaded lights and supporting stanchions. Slimline steel or bronze casements would be used for opening lights, with leaded lights installed into the casements. All windows would match apart from the ground floor pegged timber 'Cromford' sashes, where the existing subdivision would also echo the leaded lights albeit at a larger scale. Visually this would provide unified elevation of subdivided windows, similar to Option 1.

Significance

The existing leaded lights are located in the stairwell, a feature assessed to have been added during the 1754 remodelling of the south range. There is evidence of former stanchions on several of the stone window surrounds which suggests leaded lights were once present. Given this evidence and that the intention of the remodelling was to create a unified elevation, it is possible all the windows on this elevation were once leaded lights, before being replaced with pegged 'Cromford' sashes and subsequently the current windows. This option would create a unified appearance based on existing physical evidence and would be a restoration to a particular period of history.

Thermal Performance

The subdivision would be too small for vacuum glazed units, as such single glazing would need to be used. The lead cames would form regular thermal bridges so the use of thermally broken steel or bronze casements would provide little benefit. Airtightness may be reasonable initially if the glazing is puttied into the lead cames and the lights are pointed well to the stonework, however this is expected to deteriorate swiftly due to the fragility and sheer amount of individual junctions and components present.

A pragmatic solution would be to introduce new slimline secondary glazing internally. Fixed (removable) units could be used for the fixed lights, whereas casements would benefit from inward opening slimline secondary glazing. These would provide some improvement in thermal performance, airtightness and reduce condensation, whilst providing for operation and maintenance. However, they would also be visually intrusive and more cumbersome to use regularly.

Maintenance

Regular maintenance would be required with repair works requiring specialist labour and materials.

Outline Specification

- Specialist-manufactured leaded lights to replicate the existing.
- Glazing - Single 'reamy' glass
- Slimline fixed and inward-opening secondary glazing internally
- Pointing - well haired lime mortar

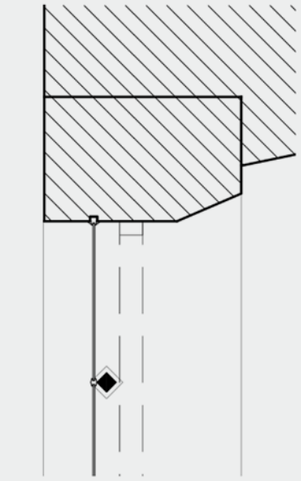

Frame Details



Elevation



Section

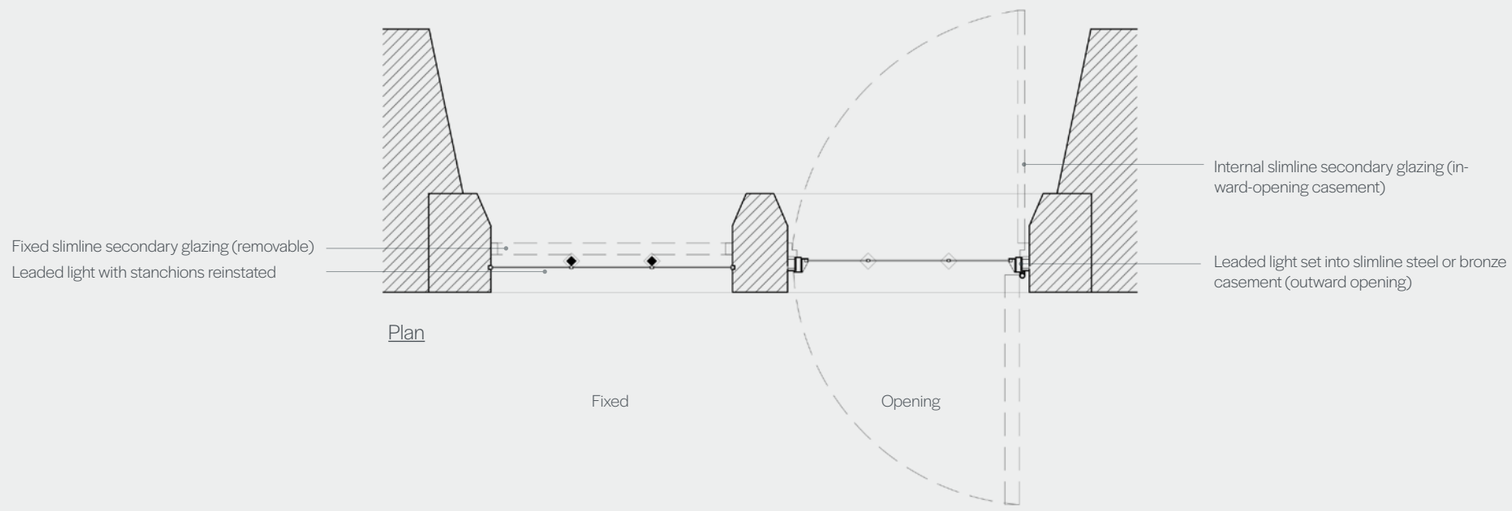

Plan

Option 2: Leaded lights with secondary glazing internally - Elevation Study



Option 3: Thermally-broken Bronze ‘ Thermabronze’ Casements (fixed and opening) - Detail

Discussion

This option explores the installation of thermally broken bronze casements with double glazed units for both fixed and opening lights. These would form a group, sat alongside the two pairs of pegged timber ‘Cromford’ sashes and the vertical group of stairwell leaded lights. A medium bronze is proposed to tone with the surrounding stonework and appear visually recessive. The timber sashes and doors would be repainted in linseed oil paint to closely match the colour of the bronze. Visually this would tie together the windows and doors, with the vertical group of leaded lights sitting as a feature.

Significance

This is an honest conservation approach that introduces new high quality interventions alongside repaired and celebrated significant historic fabric. The use of metal frames with slim sight lines (37mm/51mm) reflects the former metal casements that would have house the leaded lights. This option would create a mostly unified appearance through the use of colour, and would celebrate the different periods of history contained within this elevation.

Thermal Performance

The bronze frame sections contain two thermal breaks with integral draft seals and accept 18mm double glazed units. Vacuum glazing was initially considered but was incompatible with the frames. A low-e coating will be used and low-iron glass which will provide good thermal performance to current standards whilst avoiding the green tint of most modern double glazing, appearing appropriate adjacent to the historic windows.

Airtightness would be good with the frames well sealed and pointed to the stonework.

Maintenance

Bronze is a non-ferrous metal and naturally resistant to corrosion requiring minimal maintenance to retain its durability. Bronze does not require galvanising and painting or powder coating, which can deteriorate over time.

Outline Specification

- Architectural Bronze ‘Thermabronze’ fixed and opening side-hung casement windows with equal legs in ‘medium bronze’
- Glazing - Low-E, Low Iron double glazed units (1.4W/m^{2}K)
- Modern sealant, fronted with burnt sand mastic fillet if required.

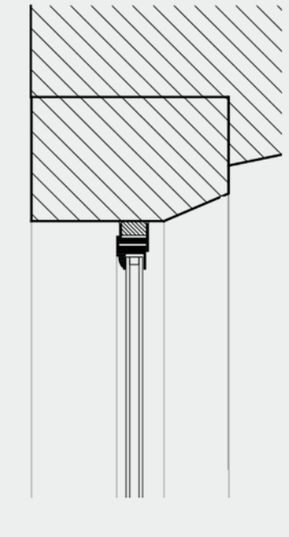

Frame Details



Elevation



Section

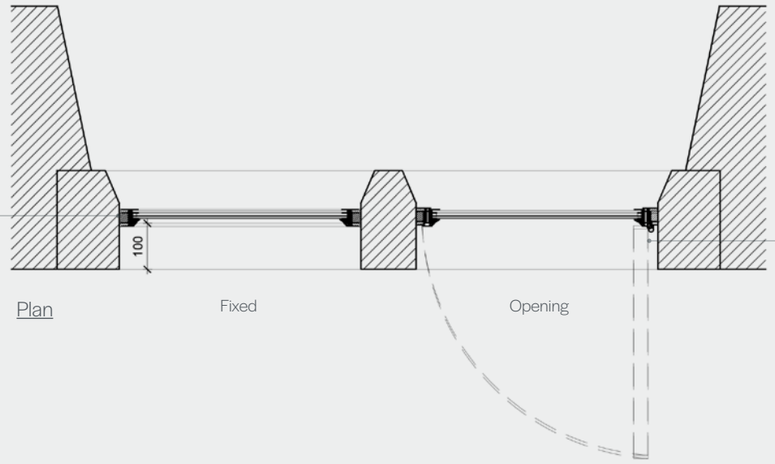

Plan

Option 3: Thermally-broken Bronze ‘ Thermabronze’ Casements (fixed and opening)



Option 4: Vacuum glazing direct to stone (with metal casements for opening lights) - Detail

Discussion

This option explores the installation of vacuum glazed units directly into the stonework (fixed lights). Opening lights would require metal casements to operate - Thermabronze casements with double glazed units would provide an appropriate solution. Again these would form a group sat alongside the two pairs of pegged timber 'Cromford' sashes and the vertical group of stair well leaded lights. The directly glazed fixed units would be the most discrete of all the options. The timber sashes and doors would be repainted in linseed oil paint to closely match the colour of the bronze. Visually this would tie together the windows and doors, with the vertical group of leaded lights sitting as a feature.

Significance

This is again an honest conservation approach that introduces new high quality interventions alongside repaired and celebrated significant historic fabric. Directly glazing into the stonework would closely emulate the historical process of installing leaded lights and result in a barely perceptible sight lines for the fixed windows (although refer to 'maintenance' below). The use of metal frames for the casements would carry the same benefits as Option 3. Overall this option would create the most variance in window types across the elevation but could be unified through the use of colour. It would be an innovative solution that would celebrate the different periods of history contained within this elevation.

Thermal Performance

Vacuum glazing directly into the stonework and omitting the metal frame is expected to result in a thermal performance 2-3 time better than the double glazed Thermabronze units. Otherwise this option retains the same benefits as Option 3. Airtightness would be good with the frames well sealed and pointed to the stonework, but would deteriorate over time as the mortar degrades.

Maintenance

Research suggests there should be little meaningful thermal movement between glass and stone, which can be managed with a small gap and flexible modern sealant. The glazing would be pointed in place with fillets of well-haired lime mortar, which would need to be formed against temporary timber battens during installation. There is a risk the mortar would deteriorate over time and the glazing work loose. Installation may not be simple as the existing stone surrounds and mullions are not all 'plumb', so large irregular gaps are likely to present and require additional packing, sealant and larger mortar fillets - a potentially unsightly appearance.

Outline Specification

- Glazing - Vacuum glazed units with discrete evacuation ports (Passivglas Linear, 0.5W/m^{2}K)
- Architectural Bronze 'Thermabronze' for opening side-hung casements with equal legs in 'dark bronze'
- Modern sealants with lime mortar fillets to front and rear

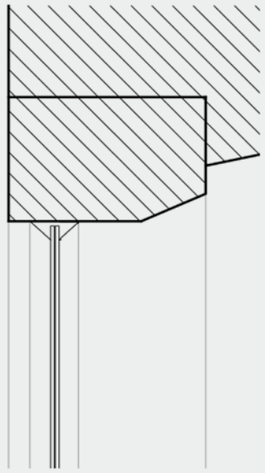

Frame Details



Elevation

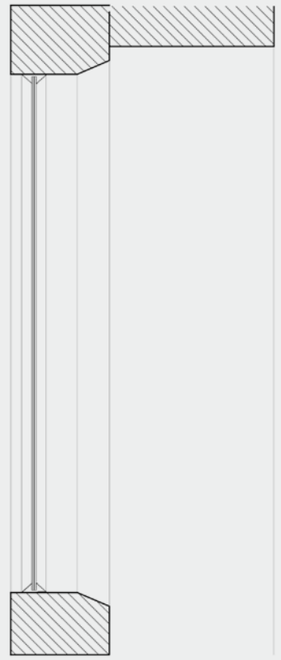

Section

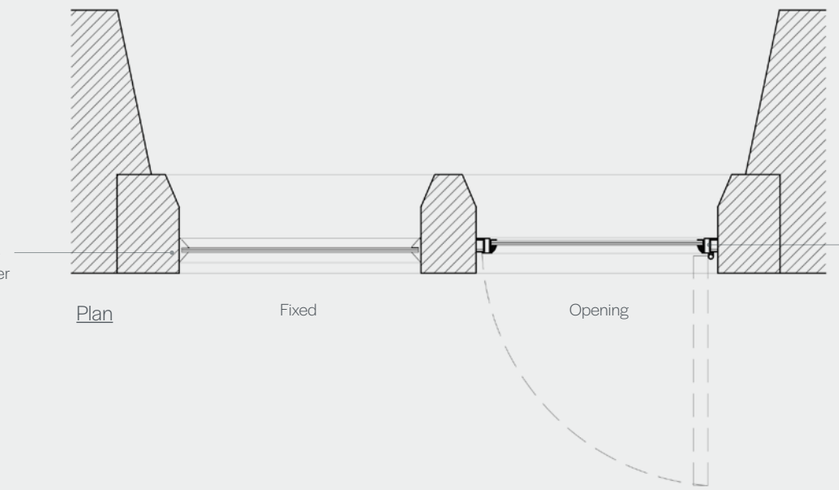

Plan

Option 4: Vacuum glazing direct to stone (with metal casements for opening lights) - Elevation



Summary

All options are valid conservation approaches that ensure the most significant remaining historical fabric is conserved. Options 1 and 2 are speculative restorations based on existing fabric evidence, whilst Options 3 and 4 are honest new interventions.

An important consideration throughout all options has been the effect of the proposals on the 'unity' of the elevation. This consideration was outlined by AVBC's Conservation Officer:

"bearing in mind the historic evidence that this was intended to be a unified elevation, blending previous phases into one, so a unified appearance is desirable but not absolutely essential."

Historic England's view was that the different windows:

"contributes to an interesting and unique appearance across the elevation that has developed since the original construction of Lea Hall, and which contributes to the buildings aesthetic significance"

So whilst not essential, the effect of each option on creating a unified appearance has been assessed throughout. Unity can be achieved most easily through matching historical windows materials and subdivision as in Options 1 & 2, or more subtly through use of colour whilst embracing variation in the styles and subdivision of windows as in Options 3 & 4.

Pragmatic considerations such as usability, maintenance, installation and thermal performance has also been assessed. Options 1 and 3 propose the use of vacuum glazed units (VGUs) to achieve the best thermal performance whilst being as close to the appearance and detailing of single glazing. Option 2 falls short in this area, requiring secondary glazing internally on all windows to try and achieve a moderate thermal performance, compromising on usability and appearance. Option 3 uses optimised double glazed units, providing a balance of thermal performance with slimline frames.

Option 1 potentially has better thermal performance through the use of VGU's, but the ability to specify them is 'borderline' due to the minimum available sizes. Option 1 is still high in maintenance and more susceptible to deterioration from the weather.

Options 3 and 4 are the best in thermal performance, usability and maintenance. Option 4 is innovative and has the slimmest sight lines and most 'honest' approach, but comes with potential installation and longevity risks.

The preferred option is Option 3 - thermally broken bronze casements with low-e, low iron double glazed units. These best balance the conservation of the building's special architectural and historic interest whilst delivering a sustainable and technically appropriate outcome with the least potential long-term issues.



Option 1
Timber 'Cromford' sashes with VGU's



Option 2
Leaded Lights with internal secondary glazing



Option 3
'Thermabronze' casements with DGU's



Option 4
Direct glazed VGU's



Option 3
'Thermabronze' casements with VGU's