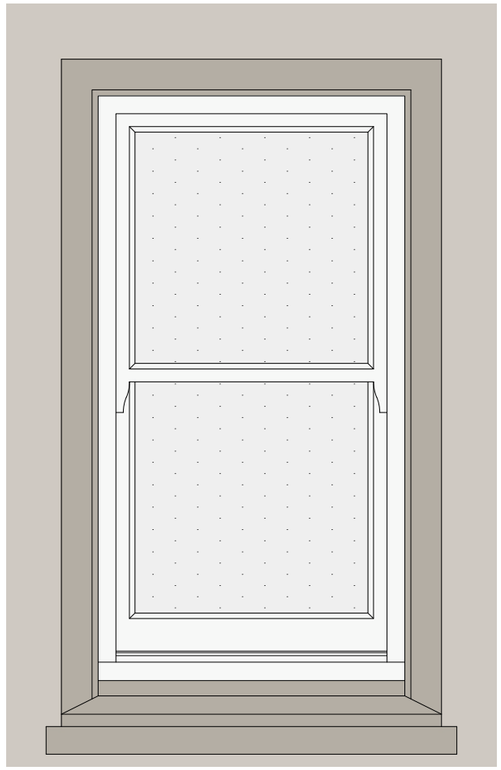

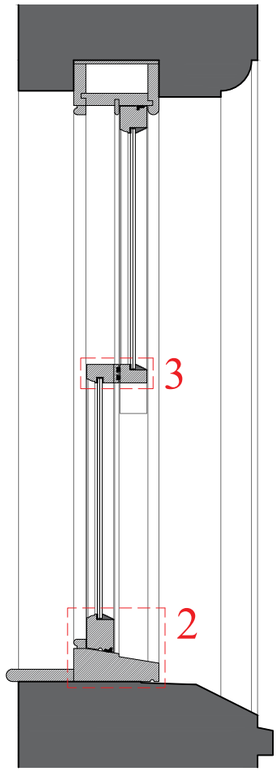

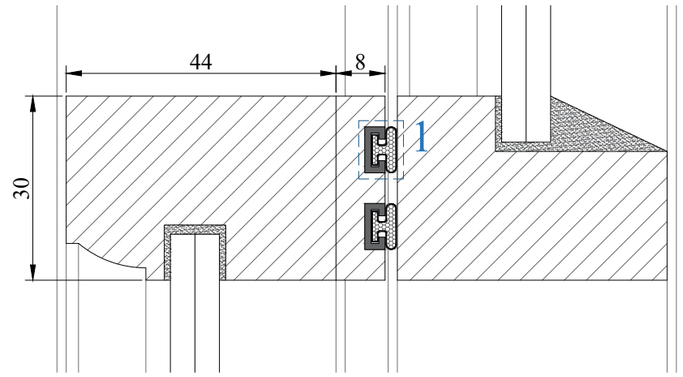

3 MEETING RAIL DETAIL
SCALE: 1:1

0mm 10 20 30 40 50

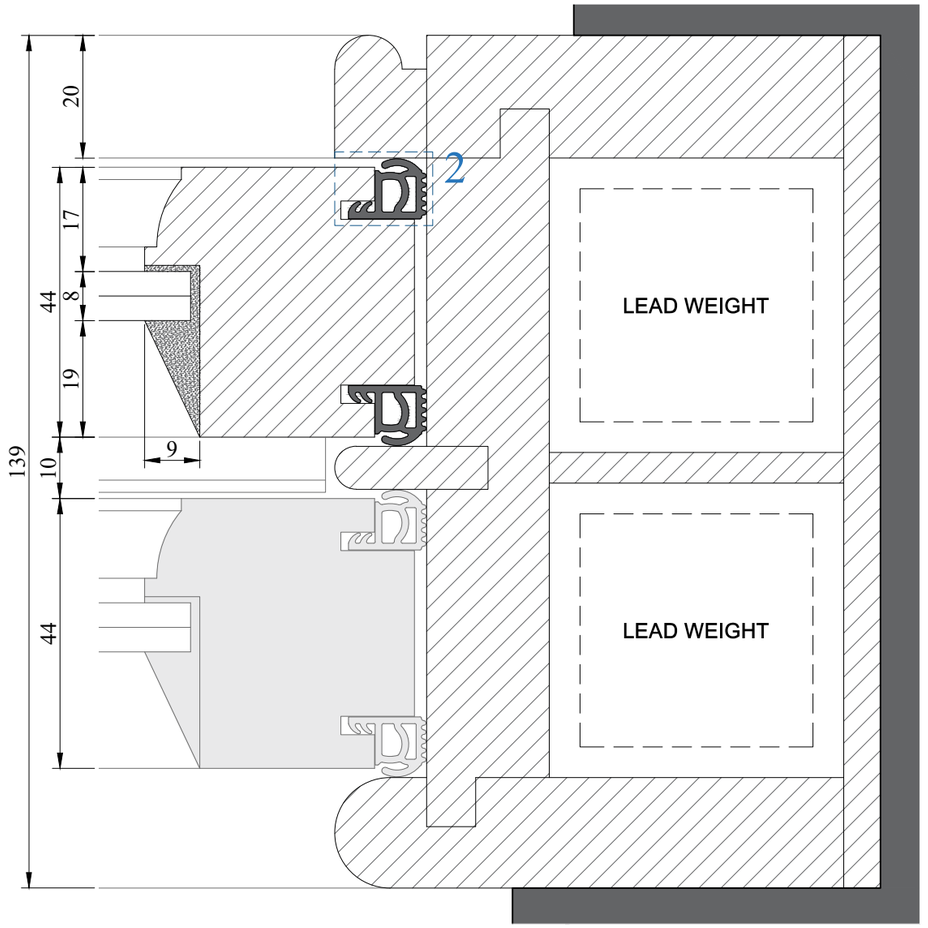

4 SASH BOX DETAIL
SCALE: 1:1

0mm 10 20 30 40 50

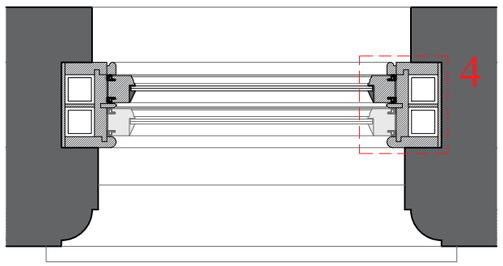

1 TYPICAL SASH WINDOW IN PLAN, ELEVATION & SECTION
SCALE: 1:10

0mm 100 200 300 400 500

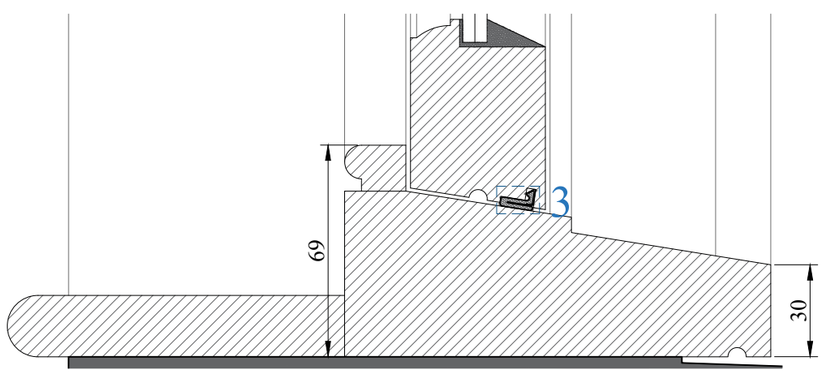

2 CILL DETAIL
SCALE: 1:2

0mm 10 20 30 40 50

Additional Information:

The drawings in this document show our bespoke approach to delivering an outer putty finish on our windows, as required by the Conservation Officer.

The FINEO vacuum insulating glass is bedded on putty and secured in place with glazing sprigs as would be expected with traditional glazing.

Our sash windows utilise Deventer SV5920 weather seals which center the sashes, give a smooth operating motion and provide weather proofing whilst remaining out of sight at all times.

Key:

1 - Schlegel QL48650 weatherseal and carrier

2 - Deventer SV5920 Weatherseal

3 - Schlegel AQ21 Aquamac Weatherseal

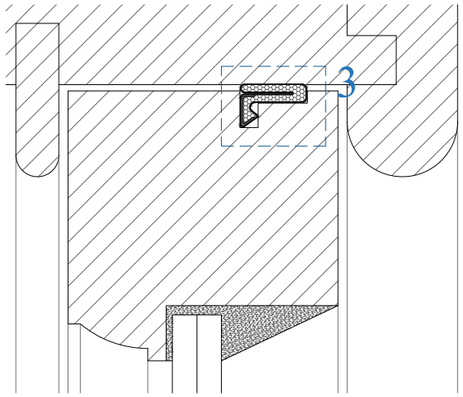

5 EXTERNAL SASH HEAD DETAIL
SCALE: 1:1

0mm 10 20 30 40 50

WATER LANE JOINERY

Project Title: **KILBURN HALL**	
Drawing Title: **TYPICAL SASH WINDOW WITH OUTER PUTTY FINISH**	
Drawing No: **WLJ260271 - 002**	Drawn / Check: **CFE / WK**
First Issue: **AUGUST 2026**	Current Issue : **AUGUST 2026**
Scale: **1:10 / 1:2 / 1:1 at A3**	Revision: *****