

Roof Plan
Scale 1 : 20

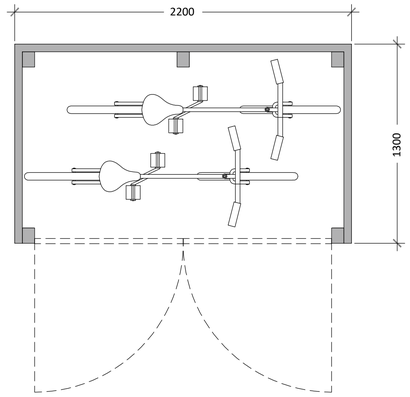

Floor Plan
Scale 1 : 20



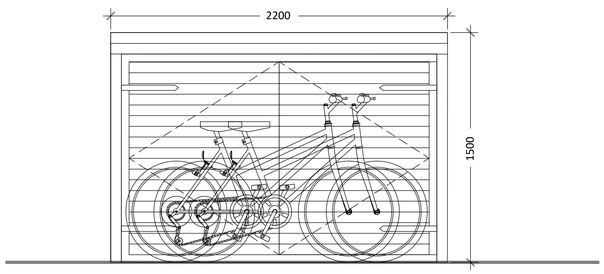

Front Elevation
Scale 1 : 20

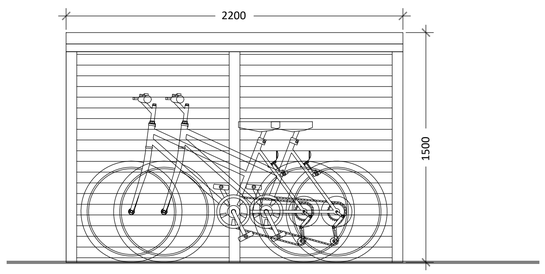

Rear Elevation
Scale 1 : 20

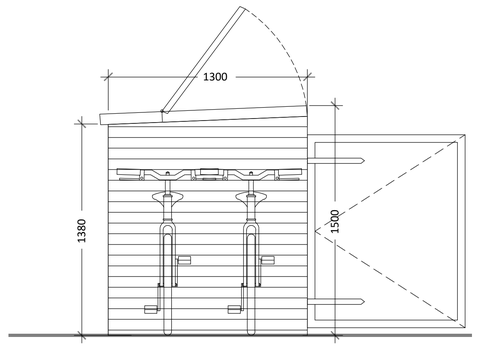

Side Elevation
Scale 1 : 20

PLANNING PURPOSES ONLY.

Notes:

1) The contractor to confirm details of the existing structure are correct prior to commencement of any works. if there are any discrepancies please contact us.

2) Soakaways are to be a minimum of 5.0m away from any building and 10.0m away from any water course.

3) All drainage details are indicative and should there be any discrepancies, please contact us to review or agree with the building control officer.

4) Contractor to locate the position of any existing services prior to excavation.

5) In any project in which a Party Wall Agreement is required, it is the contractor/ client responsibility.

6) Drawing to be read in conjunction with the biodiversity enhancement report prepared by naturesound ecoacoustic.

Rev.	Revision Description	Drn	Date

JTAYLOR DESIGN & DRAFTING

Client

Ashley Austin

Contract Title:

Rakestone, Kirk Ireton
Barn Conversion

Drawing Contents:

Bike Store Details

Drawing Status:

Preliminary

Drawn by:	Date:	Scale:
JT	Sep 2026	1:50 @A1

Drawing No:

JT0029 - 007

P1