WINDOW DETAILS — SCALE 1:5

Window Elevation N.T.S.

Print at 100% / Actual Size. Do not use 'Fit to Page'. Scale based on the 93 mm head dimension.

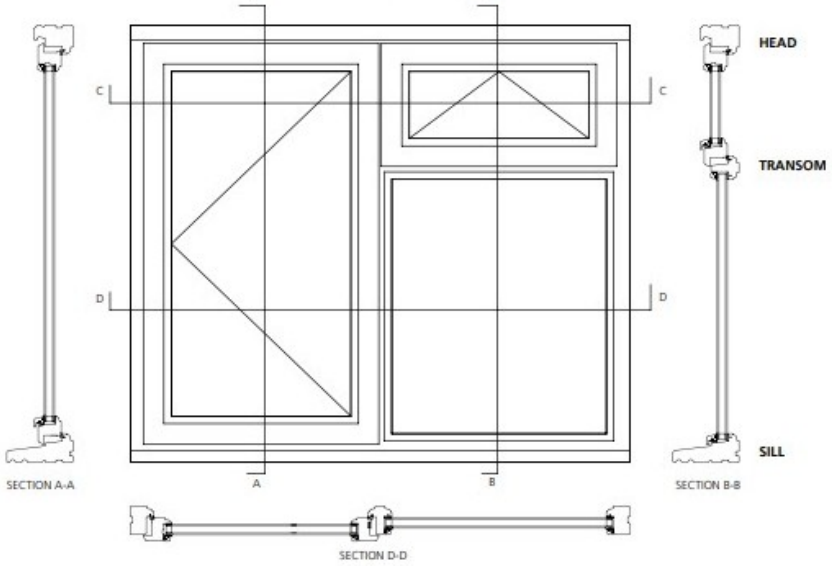

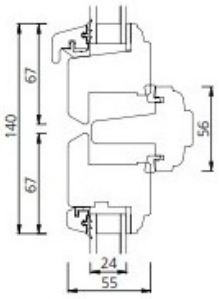

TRANSOM

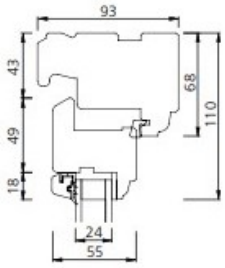

HEAD

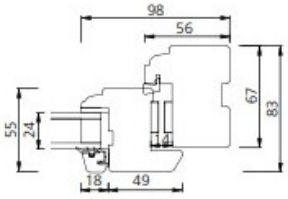

JAMB

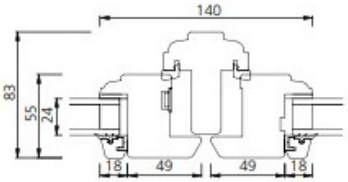

MULLION

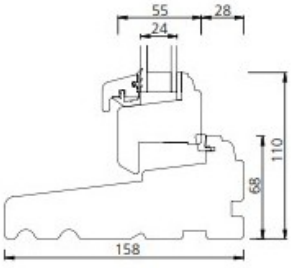

SILL

SCALE CHECK — 200 mm ACTUAL = 40 mm ON PAPER (1:5)

WINDOW DETAILS - SCALE 1:5

0 20 40 60 80 100120140160180200

Print PDF at 100% / Actual Size. The full bar should measure exactly 40 mm.