PAUL HICKING ASSOCIATES

ARCHITECTURAL TECHNICIAN AND ECOLOGY

LAND ADJACENT TO
4 DROVERS WAY
BULLBRIDGE
DERBYSHIRE
DE56 2EZ

TREE SURVEY AND
ARBORICULTURAL IMPACT ASSESSMENT

In accordance with BS5837:2012:
Trees in relation to Design, Demolition and Construction – Recommendations.

(12th October 2026)

REPORT REF: 25102 - PHA



LAND ADJACENT TO
4 DROVERS WAY
BULLBRIDGE
DERBYSHIRE
DE56 2EZ

TREE SURVEY AND
ARBORICULTURAL IMPACT ASSESSMENT

(12th October 2026)

REPORT REF: 25102 - PHA

CLIENT: Ms. F. Morgan
4 Drovers Way
Bullbridge
Derbyshire
DE56 2EZ

ECOLOGIST: Paul Hicking Associates
12 Beaurepaire Crescent
Belper
Derbyshire
DE56 1HR
Tel: 07856 729813
Email: paul@hicking.plus.com

Report Prepared By:

.....
Paul Hicking 12th October 2026.
Director

Report Checked By:

.....
Paul Hicking FdSc ECCM 12th October 2026.

COPYRIGHT
The contents of this document must not be copied or reproduced in whole or part without the written consent of Paul Hicking Associates.

CONTENTS

1.0	SUMMARY	4
2.0	INTRODUCTION	5
3.0	ASSESSMENT PRINCIPLES	9
4.0	ARBORICULTURAL METHOD STATEMENT – DESIGN & CONSTRUCTION STAGE	12
5.0	APPENDIX 1 – SCHEDULE OF SURVEYED TREES.	17
6.0	APPENDIX 2 – TREE SURVEY CONSTRAINTS AND TREE PROTECTION PLANS	19

1.0 SUMMARY

1.1 This report is concerned with trees located within the immediate vicinity of the proposed residential development.

1.2 The report and accompanying tree survey schedule are produced in accordance with the guiding principles of British Standard 5837:2012 'Trees in relation to Design, Demolition and Construction – Recommendations.'

1.3 The Root Protection Area (RPA) of the trees surveyed are calculated and recorded in the Tree Survey Schedule where they are expressed in linear metres; it is this distance/around this area that tree protective barriers should be erected around any trees to be retained. Where construction is proposed within these areas special techniques should be employed and general guidance is contained herein.

1.4 This report provides guidance for the design team and sets out the constraints relating to the trees on site. Tree survey and RPA details can be found in the Tree Survey Schedule and drawing ref: 25102-01. A Tree Protection Plan (TPP) is also provided drawing ref: 25012-02.



1.5 Aerial and context photograph of the survey site.

2.0 INTRODUCTION

2.1 Paul Hicking Associates were appointed by Ms. F. Morgan to prepare a tree survey report and arboricultural impact assessment in line with BS 5837:2012 - Trees in relation to Design, Demolition, and Construction. A site survey was carried out on 8th January 2026 to assess the condition of the existing trees and to determine any arboricultural implications or works required in relation to the proposed residential development. Weather conditions were recorded as follows on the day of the survey;

2.2 **Weather Conditions**.

Table 1:

Date	Weather Conditions
08/01/2026	3°C occasional showers, calm breeze 0, 100% low cloud cover.

Site Description

2.3 The survey site is located within the hamlet of Bullbridge in Amber Valley, Derbyshire and is located at grid reference SK 35884 52264 and comprises of a large area of tarmac hardstanding with mixed scrub border planting and scattered urban trees. There is a mature mixed woodland enclosing the south eastern boundary.

Environmental Assessment

2.4 The trees which are the subject of this report are located along the boundary enclosure of the site and form prominent features within the surrounding landscape further defined by a continuous dense tall-canopy of mixed woodland along the bank edge of the River Amber and enclosing the southern boundary of the site

2.5 All trees are considered high in ecological value due to their age range and contribution to local biodiversity and their ability to support a variety of wildlife.

Arboricultural Impact Assessment.

2.6 All trees surveyed vary in age and maturity and are unmanaged creating deadwood within the canopy structure leading to poor and moderate condition and are without signs of disease or decline however, many stems along the southern boundary are clad with dense Ivy (*Hedera helix*), cover. There are currently 6no. individual trees 1no tree group and 2no. woodland tree groups in close proximity to or within the proposed red-line boundary of the application site and comprise of the following:

2.7 Table 2: Schedule of existing trees.

Category	Tree Number	Totals
C2	T2, T6.	2
U	T1, T3, T4, T5, TG7, WG8, WG9.	7

Impact of the development work.

2.8 There are no notable trees within the site and woodland trees adjacent to the southern boundary have not been managed for some time developing extensive ivy growth around the main stem. All trees along the northern boundary with the exception of T1 are to be retained to maintain the landscape. T6 and TG7 are to be removed from within the site.

2.9 Over-shading and Woodland Tree Removal – Existing retained trees are to the north of the proposed dwellings and therefore there is very little impact from over shading however, the tall woodland canopy does provide shading to the area of all new dwellings. A site meeting was held between the LPA Officer and Tree Officer and there is an agreement for trees within woodland group WG8 to be removed. The extent of tree removal and retention is indicated on drawing no. 25102-02. The removal of trees is to be co-ordinated with the LPA tree Officer with trees to be removed to be clearly marked-up and identified on site.

2.10 Foundation design – The design of the foundations for the storage building will be influenced by the tree species present either retained or removed and will most likely be a simple concrete slab or mini-piles or pits and or 600 x 600mm fence post foundations. This will be confirmed by a Structural Engineer.

2.11 Services – The location of all new services are at this time unknown and therefore they should be located outside of the root protection area of a retained tree. Further details will be required during the construction phase of the development.

2.12 Working heights – some tree pruning works will be required to allow for the erection of scaffolding. The majority of woodland canopy is above eaves level of proposed buildings.

2.13 Movement and delivery of materials – The existing tarmac surface can be used for the storage and delivery of materials to the site. This area is also adjacent to the site entrance.

Conclusion.

2.14 The construction of the proposed dwellings can be undertaken with the removal of trees of minor significance within the site and the removal of woodland group trees in accordance with the level of tree removal as agreed with the LPA. The proposals indicate that works can be undertaken without specialist foundation design or no-dig methods of construction. This will be finalised and agreed with the project Engineer.

2.15 **Tree Preservation Order (TPO) and Conservation area.**

The development site is not located within a conservation area. And the trees are not the subject of a tree preservation order.

2.16 **Trees and Wildlife.**

2.17 **Bats -** Trees can play host to roosting bats, all of which are protected by law. The trees were visually assessed from ground level and there are no features with the potential to support roosting bats present within the trees surveyed.

2.18 **Birds –** Trees play host to nesting birds and their nests are protected by law during the bird breeding season. All trees identified within this report have the potential to support breeding birds. To avoid a breach of the legislation, works to trees are to be carried out outside of the bird breeding season, which normally runs from mid-March to September inclusive. If it is necessary to carry out work during the bird breeding season, then a thorough search of the areas to be affected should be carried out by a suitably qualified ecologist prior to starting the works. If any active nests were found, works should stop until all chicks have fledged.

2.7 **Legislation.**

2.8 **Bats** – All bat species are afforded full protection under UK and European legislation, including the Wildlife and Countryside Act 1981 (as amended), Countryside Rights of Way (CRoW) Act 2000 and The Conservation of Habitats and Species Regulations 2010 (as amended). Together, this legislation makes it illegal to:

• Intentionally or deliberately take, kill or injure a bat;

• Damage or destroy or obstruct access to bat roosts; and

• Deliberately disturb bats.

2.9 **Birds** – The bird breeding season generally lasts from early March to September for most species. All birds are protected under the Wildlife and Countryside Act 1981 (as amended), Countryside Rights of Way (CRoW) Act 2000. This legislation makes it illegal, both intentionally and recklessly to:

• Kill, injure or take any wild bird.

• Take, damage or destroy the nest of any wild bird while it is being built or in use.

• Take or destroy the eggs of any wild bird; and

• Possess or control and wild bird or egg unless obtained legally.

2.10 Birds listed under Schedule 1 of the Wildlife and Countryside Act 1981 (as amended) are afforded additional protection, which makes it an offense to disturb a bird while it is nest building, or at a nest containing eggs or young, or disturb the dependent young of such bird.

2.11 **Tree preservation Orders**: It is an offence to cut down, lop, uproot, wilfully damage or destroy tree subject to a tree preservation order (TPO) without the issuing planning authority's permission

3.0 ASSESSMENT PRINCIPLES

3.7 The section states the findings of the survey effort.

Survey timing - The survey was carried out at a time to aid the design process of the new development.

Survey methodology and limitations.

3.8 Topographical Survey - A topographical survey was made available for the site. This survey was provided in a CAD format and includes the position of all significant trees and hedgerows on or immediately adjacent to the site. The survey also includes all other landscape features such as the position of existing buildings and structures, pathways and access roads. Changes in ground levels were also recorded on the survey and are related back to known ordinance survey levels and co-ordinates.

3.9 All trees have been inspected visually only. No survey work has been carried out to determine the internal condition of any trees. Further investigations can be made and will be recommended where considered necessary but are beyond the scope of this report. Trees with a diameter greater than 75mm have been surveyed. The location of any below ground services has not been investigated within this report.

3.10 We have inspected all the trees that would be influenced by the development proposals. Their reference number and canopy spread are shown on drawing nos. 25102-01 Existing Tree Survey and Root Protection Areas.

3.11 **Site survey and recording** - A full site walkover survey was carried out. Using a copy of the topographical survey and the position of all trees was reconfirmed and updated accordingly. There was adequate access to all trees and no ground vegetation clearance was required to allow the survey to be carried out.

3.12 Assessments of the condition of the trees were only done visually from the ground. Due to mapping limitations some inaccuracies in relative position of features on the plan may exist. Therefore, all measurements for root protection areas should be taken directly from the trees themselves.

3.13 The following survey information was gathered from each tree to allow a comprehensive schedule to be produced:

• Species identification – recorded as common name and/or scientific name.

• Crown height – recorded to the nearest 0.5m up to 10m and nearest 1.0m for dimensions over 10m.

• Stem diameter - each tree was measured using a diameter/circumference tape at a height of 1.5m above finished ground level (DBH), to allow the root protection area to be calculated. All dimensions were recorded in millimetres.

3.14 • Branch spread at four cardinal points – recorded to the nearest 0.5m up to 10m and nearest 1.0m for dimensions over 10m.

• Life stage (e.g. young, semi-mature, early mature, mature, over mature).

• Estimated remaining contribution, in years (<10, 10+, 20+, 40+).

3.15 All trees were given an identification number and were recorded using the following colour coding to identify their assigned retention category:

Category A. Trees of high quality with an estimated remaining life expectancy of at least 40 years.

Category B. Trees of moderate quality with an estimated remaining life expectancy of at least 20 years.

Category C. Trees of low quality with an estimated remaining life expectancy of at least 10 years, or young trees with a stem diameter below 150mm.

3.16 Category U. Those in such a condition that they cannot realistically be retained as living trees in the context of the current land use for longer than 10 years.

3.17 Colour coding as Table 2 BS 5837:2012.

3.18 Sub-categories

1 = Mainly arboricultural qualities;

2 = Mainly landscape qualities;

3 = Mainly cultural values.

3.19 Trees were also assessed for their condition as follows:

• Good - trees in apparent good condition with no obvious defects.

• Average- trees apparently in fairly good condition or with defects that could be corrected by good tree surgery.

• Poor - trees in poor condition with significant defects or in obvious decline.

Deadwood was assessed as follows:

• Light - less than 50mm diameter.

• Minor - less than 100mm diameter.

• Major - greater than 100mm diameter.

3.20 **Tree Retention Strategy**:

3.21 • To comply with legislation for the protection of trees subject to a Tree Preservation Order and/or within a Conservation Area where applicable.

• To promote good arboricultural practice.

• To introduce where possible good arboricultural practice to maintain the health of existing trees.

• To protect existing trees during the construction period

• To facilitate and inform the design proposals

4.0 ARBORICULTURAL METHOD STATEMENT – DESIGN & CONSTRUCTION STAGE

4.7 **Design Stage** - The most susceptible part of a tree to damage is its root system, which because it is underground, out of sight, it is frequently ignored. Damage or death of the roots will affect tree health, growth, life expectancy and safety. The ability of a tree to tolerate some disturbance and alteration of its growing conditions depends on specific circumstances, including prevailing site conditions, and in general, the older the tree, the less successfully it will adapt to new conditions.

4.8 The majority of tree roots live in the top 600mm of top soil and as such are particularly vulnerable during initial construction activity, soil stripping etc. Damage to the soil structure may result in changes in moisture, oxygen availability and carbon dioxide dispersal. This can lead to anaerobic conditions and root death. Root damage can result in instability or premature decline which may not manifest for a number of years, often long after development has been completed.

4.9 Tree Roots are dynamic structures which constantly 'seek' new soil horizons which are conducive to their function and development; new roots can develop in these horizons whilst roots in less productive horizons might be aborted. Consequently, in general terms, trees will tolerate some construction related root disturbance if:

- The tree has sufficient vigour/vitality to sustain the disturbance in the short term
- Any disturbance is kept to a minimum and special techniques are adopted to ensure such
- Alternative soil horizons are available/can be created within which roots can develop and flourish.

4.10 In order to protect the soils and the roots that live in them strong protective fencing is vital. Whilst BS 5837: 2012 gives recommended distances to protect tree health the aim should be to protect as large an area as possible. It should allow for all site activities, so excluding service trenches and soakaway's, storage as well as actual construction activities.

4.11 **Construction Stage.**

4.12 Tree Protection Plan.

The location of root protection areas is shown on drawing nos. 25102-01 Existing Tree Survey and Root Protection Areas. However, a further pre-construction phase plan will be required for the approval by the Local

Planning Authority Tree Officer to confirm the following:

- Locations of all site accommodation.
- Site construction access.
- Construction staff parking.

• Materials storage areas including the location of materials storage hoppers.

• Specialist work areas including areas for the mixing of materials, location of cranes, plant and scaffolding.

• Construction zones for foundation excavation (including landscaping features).

• Final locations of protective barriers.

• Location of temporary new and temporary service runs.

• Location of temporary materials storage such as spoil heaps etc.

• Location of new and temporary access roads.

• Construction works phasing.

• Final location of all protective fencing.

4.13 **Tree Protection Sequence**

The following sequence of events should be followed during the development process to ensure tree protection and survival is possible. The following outline the minimum sequence of protection works required.

4.14 **Prior to development**

4.15 • Install protective fencing and carry out crown reduction works to woodland edge by a reputable tree surgeon in accordance with BS 3998:2010 (Tree Work Recommendations).

4.16 **During construction**

4.17 • Retain protective fencing – all protective fencing to be retained throughout development unless a variation agreed by appointed project arboriculturist.

4.18 • All works within the RPA of an existing retained tree are to be undertaken under the supervision of the project arboriculturist. Protective fencing is to be located to provide a minimum 1200mm wide working zone. The RPA within the working zone will be overlaid with ground protection boarding.

4.19 **Post construction**

• Fencing to be removed.

• Arboricultural assessment to determine further tree surgery or arboricultural remediation in light of final construction.

4.20 **Root Protection Areas**

4.21 Trees to be retained will require protection throughout the duration of the proposed development with protective fencing and signage (see Fig. 1 and 2 below). To ensure retention of adequate protection throughout the development process, regular site monitoring should be carried out on a formal and agreed basis to report on the condition and status of protective fencing and other methods. Protection methods should also give due consideration to the movement of site vehicles and the movement of construction materials to avoid collision with tree canopies.

4.22 Where necessary, a root protection area was calculated for each tree in accordance with BS 5837:2012 drawing No. 25102-01 Existing Tree Survey and Root Protection Areas provide details of the extent of calculated RPA. Protective barriers are to be placed around these areas or beyond the line of the canopy, whichever is the greater.

4.23 It must be ensured that wide or tall loads or plant with booms, jibs and counterweights can deliver or operate without coming into contact with retained trees above the fencing line of the construction exclusion zone. Such contact can result in serious damage to the trees and might make their safe retention impossible. Any transit or traverse of plant in close proximity to trees should be conducted under the supervision of a banksman to ensure that adequate clearance from trees is maintained at all times. In some circumstances it may be possible to maintain adequate clearance thus necessitating access facilitation pruning.

Fig. 1. Example of protective fencing and signage:



Fig. 2. Protective fencing for tree root protection:

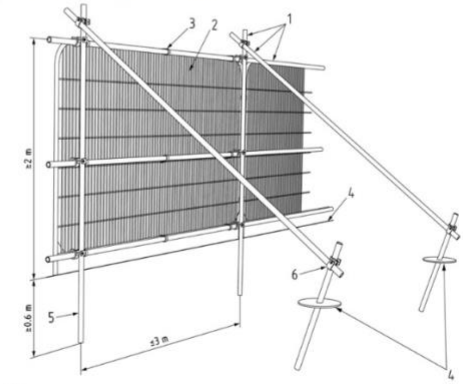

Key
1 Standard scaffold poles
2 Heavy gauge 2 m tall galvanized tube and welded mesh infill panels
3 Panels secured to uprights and cross-members with wire ties
4 Ground level
5 Uprights driven into the ground until secure (minimum depth 0.6 m)
6 Standard scaffold clamps

4.24 **Construction Stage Arboricultural Method Statement.**

4.25 Care must be taken when carrying out tree pruning work. This work is to be carried out in a careful and methodical manner to ensure protection of retained branches.

4.26 The mixing of mortars, concrete and cement-based products or the washing down of these areas should not be carried out within the vicinity of root protection areas as these may adversely affect the soil conditions. Materials which may contaminate the soils including wheel washing should not be discharged within 10m of a tree stem. The slope of the land should also be taken into consideration to avoid damaging materials running towards trees.

4.27 Compaction of soils/soft landscaping within close proximity of retained trees is to be avoided as this may affect the porosity of the ground to allow water penetration to tree roots. This may be overcome by laying tree protection boards/matting over the areas of soft landscaping to be unaffected by the works and/or surrounding the root protection area with temporary barrier fencing in accordance with (BS 5837:2012).

4.28 Any excavations which have to be undertaken within the root protection area should be carried out carefully by hand, avoiding damage to the protective bark covering larger roots. Roots, whilst exposed, should be wrapped in dry, clean hessian sacking to prevent desiccation and to protect from rapid temperature changes.

4.29 Roots smaller than 25mm diameter may be pruned back, preferably to a side branch, using a proprietary cutting tool such as bypass secateurs or handsaws. Roots larger than 25mm should only be severed following consultation with an arborist, as these may be essential to the tree's health and stability.

4.30 Prior to backfilling, any hessian wrapping should be removed and retained roots should be surrounded with sharp sand (builder's sand should not be used because of its high salt content which is toxic to tree roots), or other loose granular fill, before soil or other material is replaced. This material should be free of contaminants and other foreign objects potentially injurious to tree roots. (BS 5837:2012).

4.31 Fires should not be lit in a position where their flames can extend to within 5m of foliage, branches or trunk. This will depend on the size of the fire and the wind direction. It is preferable that the lighting of fires within the site is discouraged.

4.32 **Services** – Details regarding the siting and size of underground services are not yet available however, the following is given as general advice: Careful consideration must be given to the siting of underground services e.g. drains, electricity, gas etc. They should ideally not be sited within the RPA; where such is unavoidable; the trench must be hand dug and all roots greater than 25mm diameter must be carefully dug around and left intact. Any roots below this size, where they cannot be retained, must be cut cleanly with pruning tools. If the trench is to remain open for prolonged

periods, especially in hot, dry weather, roots must be wrapped in damp hessian sacking to prevent desiccation. In order that they can assess any impact upon trees it is likely that the LPA will require the submission of details regarding service location and installation methodology prior to the granting of any planning consent. Where drains are to be installed within the rooting zone, particular consideration must be given to their construction; compression joints are not wholly reliable and can allow root ingress.

4.33 All new services trenches are to be lined with Terram Root Guard Plus.

4.34 No machinery will be allowed onto the soil within the root protection areas/construction exclusion zones. The design of hard surfaces should avoid localised compaction and evenly distribute the carried weight over the whole of the surface width. Construction details should be based on site specific factors and expected loads. The specification for new hard surfaces must be designed by the project engineer in line with these principles and any deviation must be referred back to the appointed project arboriculturist and the Council's Arboricultural Officer.

4.35 **RECOMMENDATIONS**.

4.36 An auditable system of arboricultural site monitoring and should be factored in to the process, this should extend to supervision by an arboriculturist whenever construction activity is to take place within any RPA. Post construction – It is recommended that the implementation of regular management will maintain structure, health, character of new tree planting and their contribution towards biodiversity.

4.37 **REFERENCES**.

Arboricultural Advisory & Information Service, (1996) 'Driveways Close to Trees'

Arboricultural Advisory & Information Service, (2007) 'Through the Trees to Development'

British Standard 5837:2012 'Trees in Relation to Design, Demolition and Construction – Recommendations.' BSI.

British Standard 3987:2020 'Recommendations for Tree Work'. BSI

Lonsdale D., (1999), Principles of Tree Hazard Assessment and Management, DETR.

Mattheck, C. (2007), Updated Field Guide for Visual Tree Assessment.

Strouts R.G., Winter T.G. (1994), Diagnosis of Ill Health in Trees, 2nd Ed., DETR.

5.0 APPENDIX 1 – SCHEDULE OF SURVEYED TREES.

No.	Common Name Scientific Name	Height (m)	N	E	S	W	Dia. @ 1.5m (cm)	Age	Life Expectancy	RPA (m)	RPA (m^2)	Canopy clearance (m)	Category	Condition/Comments
T1	Hawthorn *Crataegus monogyna*	6	1.5	1.5	1.5	1.5	7.5	Y	10+ years	0.90	3	2.0	U	Poor condition. Tree congested with timber telegraph post. Tree to be removed.
T2	Hawthorn *Crataegus monogyna*	9	2.5	2.5	2.5	2.5	32.5	M	20+ years	3.90	48	0.0	C2	Moderate condition. Tree covered in dense ivy. Remove ivy and re-assess.
T3	Cherry *Prunus avium*	6	1.0	1.0	1.0	1.0	10	Y	10+ years	1.20	5	0.0	U	Moderate condition. Tree congested with adjacent Hawthorn.
T4	Hawthorn *Crataegus monogyna*	3.5	1.5	1.5	1.5	1.5	17.5	Y	10+ years	2.10	14	1.0	U	Poor condition. Tree clad in ivy. Remove ivy and re-assess.
T5	Hawthorn *Crataegus monogyna*	3.5	1.5	1.5	1.5	1.5	20	SM	10+ years	2.40	18	1.0	U	Poor condition. Tree clad in ivy. Remove ivy and re-assess.
T6	Sycamore *Acer pseudoplatanus*	12	2.5	2.5	2.5	2.5	30	SM	20+ years	3.60	41	1.0	C2	Moderate condition. Tree covered in dense ivy. Remove ivy and re-assess. Tree to be removed.
TG7	Sycamore *Acer pseudoplatanus* Elm *Ulmus glabra* Ash *Fraxinus excelsior* Hawthorn *Crataegus monogyna*	12	2.5	2.5	2.5	2.5	20	SM	10+ years	2.40	18	1.0	U	Poor condition. House Sparrow box fixed to trees. Tree group to be removed,

WG8	Sycamore *Acer pseudoplatanus* Ash Fraxinus excelsior Hawthorn *Crataegus monogyna* Silver Birch *Betula pendula*	18	8.0	8.0	8.0	8.0	15 35	M	20+ years	1.80 4.20	10 55	2.0 – 6.0	C2	Moderate condition. Mixed woodland group of trees. Tall stems with high canopy all stems clad in dense ivy. Remove ivy and re-assess. Tree removal to be carried out as agreed within site meeting between LPA officer and Tree Officer.
WG9	Sycamore *Acer pseudoplatanus*	20	5.0	5.0	5.0	5.0	15 30	M	20+ years	1.80 3.60	10 41	2.0 – 6.0	C2	Moderate condition. Tall stems with high canopy all stems clad in dense ivy. Remove ivy and re-assess. All trees to be protected and retained.

6.0 APPENDIX 2 – TREE SURVEY CONSTRAINTS AND TREE PROTECTION PLANS

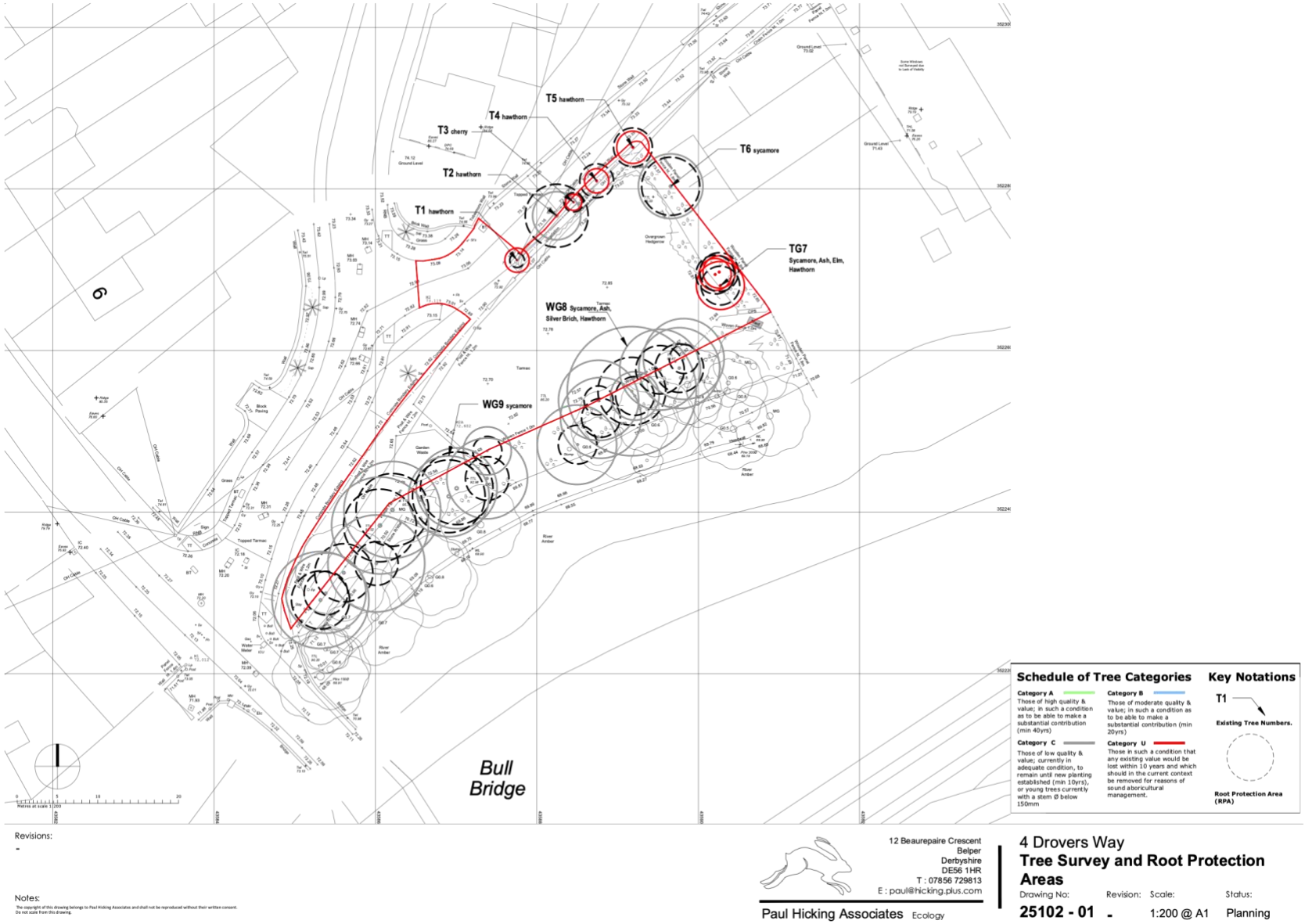

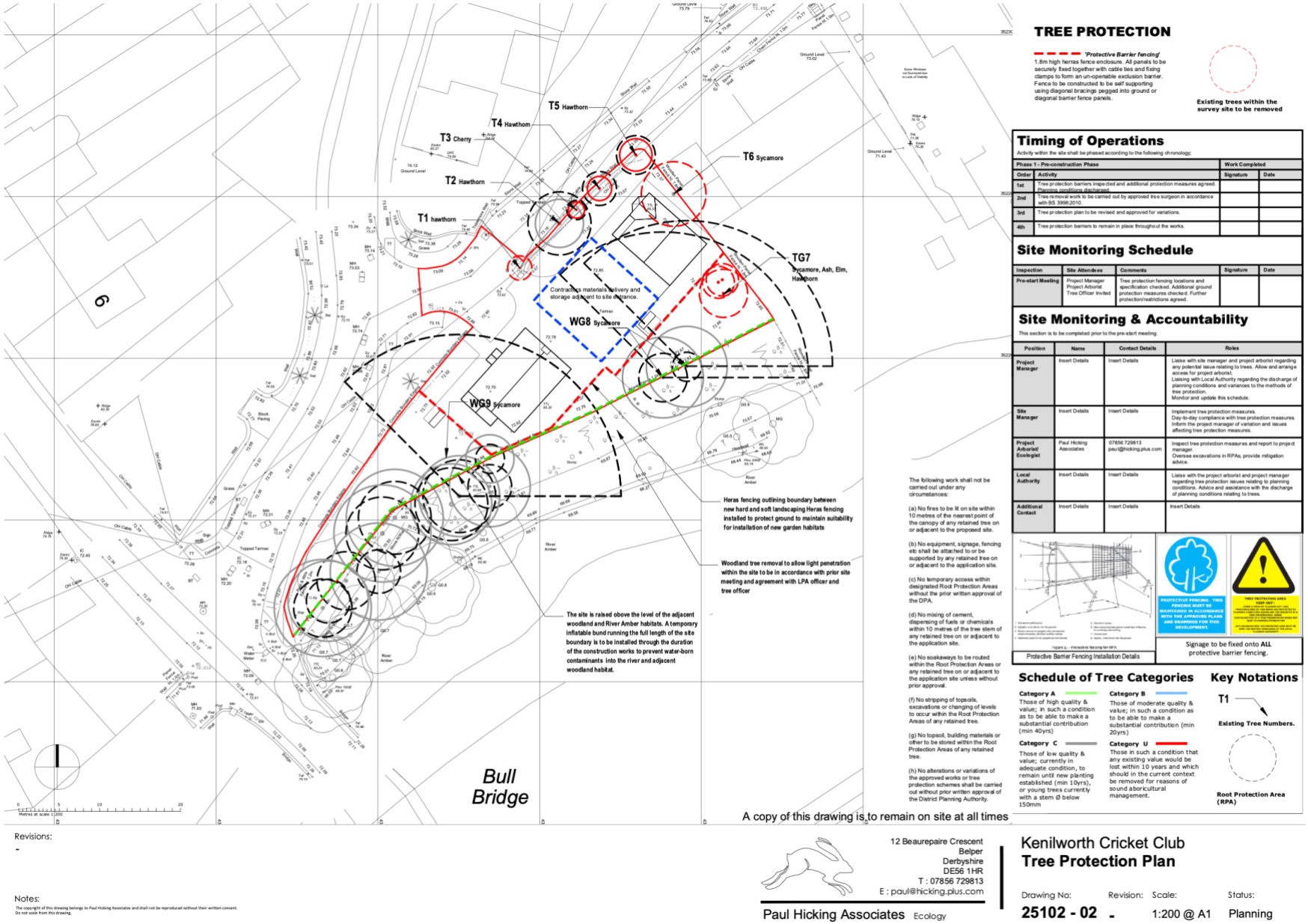

TREE PROTECTION

'Protective Barrier fencing'

1.8m high herras fence enclosure. All panels to be securely fixed together with cable ties and fixing clamps to form an un-openable exclusion barrier. Fence to be constructed to be self supporting using diagonal bracings pegged into ground or diagonal barrier fence panels.

Existing trees within the survey site to be removed

Timing of Operations

Activity within the site shall be phased according to the following chronology;

Phase 1 - Pre-construction Phase		Work Completed	
Order	Activity	Signature	Date
1st	Tree protection barriers inspected and additional protection measures agreed. Planning conditions discharged.		
2nd	Tree removal work to be carried out by approved tree surgeon in accordance with BS 3998:2010.		
3rd	Tree protection plan to be revised and approved for variations.		
4th	Tree protection barriers to remain in place throughout the works.		

Site Monitoring Schedule

Inspection	Site Attendees	Comments	Signature	Date
Pre-start Meeting	Project Manager Project Arborist Tree Officer Invited	Tree protection fencing locations and specification checked. Additional ground protection measures checked. Further protection/restrictions agreed.		

Site Monitoring & Accountability

This section is to be completed prior to the pre-start meeting.

Position	Name	Contact Details	Roles
Project Manager	Insert Details	Insert Details	Liaise with site manager and project arborist regarding any potential issue relating to trees. Allow and arrange access for project arborist. Liaising with Local Authority regarding the discharge of planning conditions and variances to the methods of tree protection. Monitor and update this schedule.
Site Manager	Insert Details	Insert Details	Implement tree protection measures. Day-to-day compliance with tree protection measures. Inform the project manager of variation and issues affecting tree protection measures.
Project Arborist/ Ecologist	Paul Hicking Associates	07856 729813 paul@hicking.plus.com	Inspect tree protection measures and report to project manager. Oversee excavations in RPAs, provide mitigation advice.
Local Authority	Insert Details	Insert Details	Liaise with the project arborist and project manager regarding tree protection issues relating to planning conditions. Advice and assistance with the discharge of planning conditions relating to trees.
Additional Contact	Insert Details	Insert Details	Insert Details

Figure 2 – Protective fencing for RPA

Protective Barrier Fencing Installation Details

Signage to be fixed onto **ALL** protective barrier fencing.

The following work shall not be carried out under any circumstances:

(a) No fires to be lit on site within 10 metres of the nearest point of the canopy of any retained tree on or adjacent to the proposed site.

(b) No equipment, signage, fencing etc shall be attached to or be supported by any retained tree on or adjacent to the application site.

(c) No temporary access within designated Root Protection Areas without the prior written approval of the DPA.

(d) No mixing of cement, dispensing of fuels or chemicals within 10 metres of the tree stem of any retained tree on or adjacent to the application site.

(e) No soakaways to be routed within the Root Protection Areas or any retained tree on or adjacent to the application site unless without prior approval.

(f) No stripping of topsoils, excavations or changing of levels to occur within the Root Protection Areas of any retained tree.

(g) No topsoil, building materials or other to be stored within the Root Protection Areas of any retained tree.

(h) No alterations or variations of the approved works or tree protection schemes shall be carried out without prior written approval of the District Planning Authority.

Schedule of Tree Categories

Category A — Those of high quality & value; in such a condition as to be able to make a substantial contribution (min 40yrs)

Category B — Those of moderate quality & value; in such a condition as to be able to make a substantial contribution (min 20yrs)

Category C — Those of low quality & value; currently in adequate condition, to remain until new planting established (min 10yrs), or young trees currently with a stem Ø below 150mm

Category U — Those in such a condition that any existing value would be lost within 10 years and which should in the current context be removed for reasons of sound aboricultural management.

Key Notations

T1 — Existing Tree Numbers.

Root Protection Area (RPA)

A copy of this drawing is to remain on site at all times

Revisions:
-

Notes:
The copyright of this drawing belongs to Paul Hicking Associates and shall not be reproduced without their written consent.
Do not scale from this drawing.

12 Beaurepaire Crescent
Belper
Derbyshire
DE56 1HR
T : 07856 729813
E : paul@hicking.plus.com

Paul Hicking Associates Ecology

Kenilworth Cricket Club
Tree Protection Plan

Drawing No:	Revision:	Scale:	Status:
25102 - 02	-	1:200 @ A1	Planning