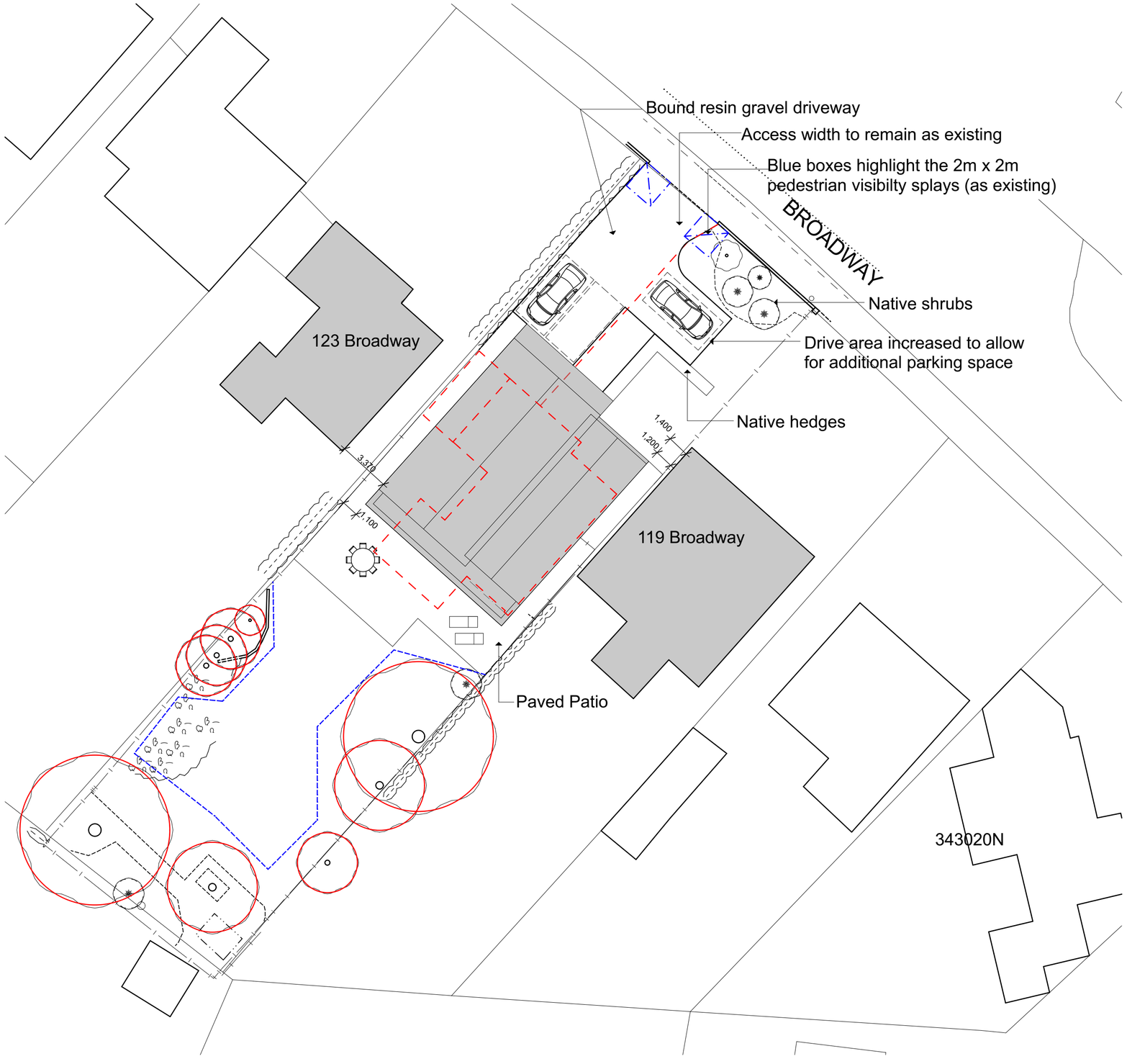

PROPOED SITE PLAN 1:200

Notes:

Copyright retained in accordance with the copyright design and patents act 1988.
Dimensions must not be scaled from this drawing. The contractor is to check and verify all building and site dimensions before work is commenced. The Contractor is to check and verify with all Statutory Authorities and Employer the local and condition of any underground or overhead services or confirm that none exist prior to work commencing on site.

CDM Regulations 2015:

Denotes a significant hazard or difficult to manage procedure. Please refer to 'Designer Risk Assessment' for further information regarding mitigation of hazards.

CDM Regulations, require all projects to:
- Have workers with the correct skills, knowledge, training and experience.
- Contractors providing appropriate supervision, instruction and information.
- A written Construction Phase Plan.

Swain Architecture are appointed as 'Designer' only, unless appointed by the client in writing to confirm Swain Architecture's role as 'Principal Designer'.

Arboricultural method statement and protection plan

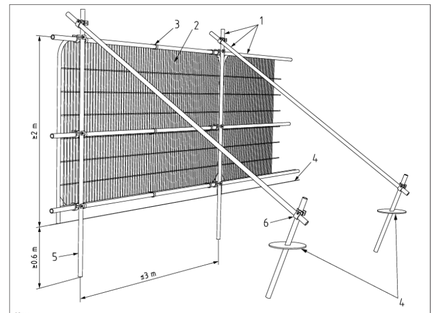

Key

1 Standard scaffold poles
2 Heavy gauge 2 m tall galvanized tube and welded mesh infill panels
3 Panels secured to uprights and cross-members with wire ties
4 Ground level
5 Uprights driven into the ground until secure (minimum depth 0.6 m)
6 Standard scaffold clamps

Protection fencing (shown above) shall be retained for the duration of the development of the site. Within the fenced off areas there shall be no alteration to ground levels, no compaction of the soil, no stacking or storing of any materials, plant, skips, equipment and/or other items associated with the development, no mixing of materials, no vehicular movements or fires and no other ancillary works associated with the development, and any service trenches shall be dug and back-filled by hand.
The protection fencing will consider and include the nominal root protection area (shown in red).

Protection fencing

Nominal root protection area

Rev	Description	Date

SWAIN ARCHITECTURE
W: www.swainarchitecture.com
E: info@swainarchitecture.com
T: 0115 972 7685
Mohan Business Centre, Tamworth Road, Long Eaton, Nottingham, NG10 1BE.

PROPOSED

Client: Mr Bevan
Project: 121 Broadway
Drawing: Proposed Protection Method
Number: 26.597.S03.05
Date: May 2026
Paper Size: A2 Scale: 1:200
Drawn By: ER Checked By: