Project: 26_5837_10_103
Site: 48 Woodlands Lane, Quarndon, Derby, DE22 5JU
Client: Tony Tillett



This Report is the copyright of Woodland Solutions Northern Limited t/a ROAVR Group.
Any unauthorised reproduction or usage by any person other than the addressee is strictly prohibited.

ROAVR | Group all rights reserved.

Project Number:	26_5837_10_103
Report Type:	Arboricultural Impact Assessment and Method Statement - 26_5837_10_103
Site Address:	48 Woodlands Lane, Quarndon, Derby, DE22 5JU

Role:	Name:	Date:
Instructing Party	Tony Tillett	22/10/2026
Client	Tony Tillett	22/10/2026
Surveyor	Heddwyn Bye	27/10/2026
Consultant	Forest Shum	07/11/2026

Revision History		
Date:	Version number:	Summary of changes:
10/11/2026	1.0	First Review (Internal)
10/11/2026	1.0	First Issue

ROAVR | Group all rights reserved.

Validation Statement for the Local Planning Authority.

This report includes the following for LPA validation purposes:

- A **tree survey and tree constraints plan** showing the existing trees, their category rating and above and below ground constraints shown on an OS extract OR a topographical survey
- An **arboricultural impact assessment** which describes how the development will affect local character from a tree perspective
- **Appendices** highlighting tree related information including the **arboricultural data tables**
- **Appendices** including the **tree constraints plan**

ROAVR | Group all rights reserved.

Table of Contents

1. Introduction & Scope:
2. Site Conditions & Site Surroundings
3. Drawings
4. Proposals
5. Arboricultural Impact Assessment
6. Limitations
Appendix 1 – Site Location
Appendix 2 – Arboricultural Data Tables
Appendix 3 – Arboricultural Plans

ROAVR | Group all rights reserved.

1. Introduction & Scope:

This arboricultural assessment has been prepared in accordance with BS5837:2012, providing the necessary information for the Local Planning Authority to assess the potential impact of the proposed development on local character and amenity from a tree perspective.

The brief was to survey the tree population on-site and identify any arboricultural constraints to the proposed development. The assessment includes all trees with a stem diameter greater than 75mm measured at 1.5 metres above ground level, as required by BS5837.

Tree surveys were conducted using ground-based inspections and the Visual Tree Assessment (VTA) method. A sounding hammer was used to assess for decay where relevant, but no invasive techniques were employed at this stage. Root Protection Areas (RPAs) were calculated in line with the methodology set out in BS5837.

Key elements of the report include:

- A Tree Constraints Plan, illustrating the position of trees on the site.
- Arboricultural data tables providing information on tree species, condition, and dimensions.
- Grouping or designation of groups and woodlands where areas were uniform in species, age, or geography, as permitted under BS5837.

This report will assist the planning process by evaluating the impact of the proposed development on the existing tree stock. Section 5 includes the Arboricultural Impact Assessment, which examines constraints posed by trees both above ground (e.g., crown spread) and below ground (e.g., RPAs).

Report Author.

ROAVR (ROAVR Group) was formed in 2010 and since then has carried out arboricultural consultancy Nationwide with directly employed consultants. Our consultants are all individual members of the Arboricultural Association and the report author is listed in the document control sheet.

ROAVR | Group all rights reserved.

Photographic Plates.



Photographic plate showing the entrance point of the proposed driveway, between Lawson's cypress T1 (centre-right) and yew T2 (left) in front of sycamore trees T5-T8 (centre-left) (ROAVR, 2026)



Photographic plate showing the above trees from the garden side: from left to right, Lawson's cypress T1, yew T2, sycamore T5 and sycamore T6 (ROAVR, 2026)

ROAVR | Group all rights reserved.



Photographic plate showing the cavity left following the loss of a large branch on tree T1 (ROAVR, 2026)



Photographic plate showing the large oak tree T3 (centre) behind blue Atlas cedar T4 (front-left) (ROAVR, 2026).

ROAVR | Group all rights reserved.



Photographic plate showing oak T3 from the roadside (ROAVR, 2026).



Photographic plate showing one of the large (>400mm diameter) historical pruning cuts on oak T3 (centre-left) and some of the habitat features present on the main scaffold limbs of the tree (ROAVR, 2026).

ROAVR | Group all rights reserved.



Photographic plate showing, from left to right, sycamore trees T5, T6 and T7, with hedge H9 beneath (ROAVR. 2026).



Photographic plate showing the area of decay at the base of the central stem on sycamore T6 (ROAVR. 2026).

ROAVR | Group all rights reserved.



Photographic plate showing magnolia T12 (centre) (ROAVR, 2026).



Photographic plate showing the site of the proposed driveway from the proposed entrance point (ROAVR. 2026).

ROAVR | Group all rights reserved.



Photographic plate showing the site of the proposed driveway from the house, showing all surveyed trees (ROAVR, 2026).

ROAVR | Group all rights reserved.

2. Site Conditions & Site Surroundings

2.1 The site is a residential property, 48 Woodlands Lane, located in Quarndon, Derby.

2.2 The site is currently in use as a private residential garden and grounds associated with the dwelling at 48 Woodlands Lane.

2.3 The property is situated within a suburban residential area characterised by detached and semi-detached dwellings with private gardens containing a mix of native and ornamental trees.

2.4 Correspondence from Amber Valley Borough Council dated 28 September 2026 confirms that a Tree Preservation Order (TPO) affects the site. T3 (Common Oak) has been identified as a protected tree; however, the precise extent of the TPO and whether any other surveyed trees are protected have not been independently verified. A review of Amber Valley Borough Council's GIS mapping on 11 November 2026 confirms that the site is located outside the designated Conservation Area.

https://info.ambervalley.gov.uk/GeoFeeds/GeoDatasets.aspx?utm

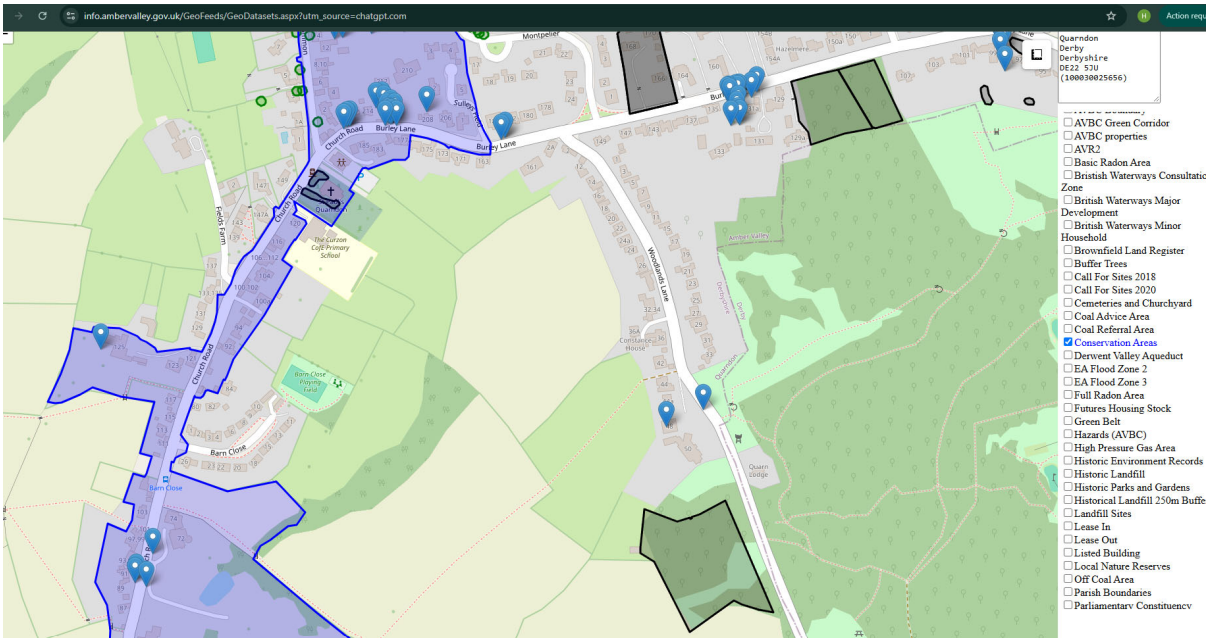

Image plate showing the site's location outside the designated Conservation Area, based on Amber Valley Borough Council GIS mapping (11 November 2026).

2.5 Works to protected trees require consent from the local planning authority. In the case of TPOs an application must be made. In the case of conservation areas a notification must be made. TPO applications take up to eight weeks, conservation area notifications take six weeks.

ROAVR | Group all rights reserved.

2.6 Certain exemptions apply; for example the removal of deadwood. In the case of dangerous trees 5-days written notice should be given to the local authority (in the cases of immediate danger the work should proceed, but the local authority contacted as soon as possible afterwards) with the works evidenced by photographs and video where possible. You should also check to ensure the works are exempt from the requirements of a felling licence.

https://www.legislation.gov.uk/uksi/2012/605/regulation/14/made

2.7 It should be noted that planning consent overrides protected trees, where the works or removal are necessary for development to proceed and have been highlighted in the tree survey documents.

2.8 Bats. Under current legislation it is an offence to 'intentionally or recklessly disturb a bat' or 'damage, destroy or block access to the resting place of any bat'. For further details consultation must be made with the Statutory Nature Conservancy Organisation. Where relevant any current ecological surveys for the site will take precedence in this matter. Trees provide numerous 'potential roosting features' for a wide range of bat species. It is therefore crucial that any trees proposed for removal are checked by an appropriately competent person before any felling or ivy stripping works commence.

https://www.bats.org.uk/advice/bats-and-the-law

2.9 Birds. It is an offence to kill, injure or take any wild bird; or take, damage or destroy the nest of any wild bird while it is in use or being built. Therefore work likely to disturb nesting birds must be avoided from late March to August. All birds, their nest and eggs are protected by law.

https://www.rspb.org.uk/birds-and-wildlife/wildlife-and-countryside-act

ROAVR | Group all rights reserved.

3. Drawings

3.1 Appended to this report is a tree constraints plan and a tree assessment plan.

3.2 The tree constraints plan has been produced using an OS supplied .dwg (AutoCAD) base plan as no topographical survey was available. Tree positions and data have been applied using our survey handset as an onsite exercise with the constraints plan being produced as a PDF through Auto CAD.

3.3 An autoCAD .dwg file of the tree constraints is available on request for project stakeholders to utilise.

3.4 The *Tree Constraints Plan* shows the existing layout. For each tree the stem location is indicated and scaled according to its diameter, the canopy is indicated according to measurements taken along the four cardinal points of the compass. Root protection areas (RPAs) are indicated which are calculated according to the guidelines within BS 5837 (2012).

3.5 Where appropriate, the shapes of the RPAs have been amended to reflect actual site conditions or where trees have been heavily pruned. The 'original' RPAs are indicated as a dashed line whereas the amended RPAs are indicated as a solid line. Any variation to this approach will be highlighted on the appropriate plans.

3.6 The *Tree Assessment Plan / Arboricultural Impact Assessment* indicates the tree constraints with the proposals overlaid. Where applicable, this plan shows where works are proposed in Root Protection Areas and which trees are to be pruned or removed. This plan accompanies the Impact Assessment which is to be found in Section 5.

3.7 The *Tree Protection Plan (if applicable)* shows the protection measures that are to be installed during the construction phase. This plan accompanies an arboricultural method statement where applicable and commissioned.

ROAVR | Group all rights reserved.

4. Proposals

4.1 Drawing References

The drawings listed in the table below were used by ROAVR to produce the Arboricultural drawings referenced in this report. If your plans change (either before or after planning submission), then the tree drawings will require updating. This report cannot be submitted in support of a scheme that varies from the drawing reference number shown in box one below as the Impact Assessment (Section 5) will not be valid.

Drawing Name / No.	Date Issued To ROAVR	ROAVR Drawings Issue Date:
26-09-03A	30/10/2026	03/11/2026

4.2 Description of Proposals.

The proposed development comprises the construction of a new vehicular driveway and access onto Woodlands Road to serve the existing property at 48 Woodlands Lane. The driveway will be approximately 4.1 m wide, extending from the existing turning area along the property boundary towards Woodlands Road. A no-dig cellular confinement system is proposed within the identified critical construction area to minimise disturbance to the roots of retained trees.

ROAVR | Group all rights reserved.

5. Arboricultural Impact Assessment

5.0 Tree Quality Statement

The survey recorded 12 arboricultural features, comprising ten individual trees and two hedges. These include one Category A tree (T3), three Category B trees (T2, T4 and T12) and eight Category C features (T1, T5–T8, T11, H9 and H10).

T3 (Common Oak) is the highest-quality tree recorded and represents an important arboricultural feature within the surrounding landscape. T2, T4 and T12 are also considered to provide moderate arboricultural value.

The remaining Category C trees and hedges contribute to the existing landscape character and boundary vegetation.

The revised driveway layout has been designed to accommodate the retention of all surveyed trees. The principal arboricultural constraints relate to the proposed driveway construction within the Root Protection Areas (RPAs) of retained trees and the highway visibility requirements affecting T2.

5.1 Trees for Removal

No trees are currently proposed for removal to facilitate the development.

The revised driveway alignment has been adjusted to avoid direct conflicts with T1, T2 and T11, which were identified as potential constraints in the original proposed layout.

However, T2 (Category B2) is situated within the proposed highway visibility splay. The architect has identified its potential removal, although the client wishes to retain the tree. Its retention remains subject to confirmation of the highway visibility requirements by the relevant authorities.

Should removal become necessary, the arboricultural assessment and associated protection plans will require revision, and any applicable statutory consent must be obtained before works commence.

5.2 Mitigation Planting

As no tree removals are currently proposed, replacement tree planting is not considered necessary to mitigate tree loss arising from the proposed driveway construction.

Sections of the existing front boundary hedge between T1 and T2 are proposed to be relocated behind the required visibility splay. The feasibility of transplanting the

ROAVR | Group all rights reserved.

existing hedge and any necessary replacement planting should be confirmed before the works commence.

Should any tree removal subsequently be required, appropriate mitigation planting should be considered in consultation with the Local Planning Authority.

5.3 Impacts to Tree Roots

The proposed driveway encroaches into the RPAs of T1, T2, T5, T6, T7 and T8.

Construction within these areas has the potential to damage existing roots and compact the surrounding soil, potentially affecting tree health and long-term vitality.

The proposed driveway incorporates a no-dig cellular confinement system within the designated critical construction area to minimise root disturbance and distribute loading.

Temporary ground protection is also proposed within the affected RPAs of T1, T2, T5, T6, T7, T8 and T11, where restricted construction access or activities may be necessary.

The client has confirmed that no excavation or reduction in existing ground levels is proposed. Subject to confirmation of the final construction details and implementation of the protective measures, the potential impacts on retained tree roots can be reduced.

5.4 Impact on Tree Canopies

The revised driveway alignment has been designed to minimise direct conflicts with retained tree stems and canopies.

T3 (Common Oak) is situated adjacent to Woodlands Road. The architect has indicated that its canopy is above the required highway visibility space, and no crown pruning is currently proposed to accommodate the new access.

T2 may present a constraint to highway visibility. However, no pruning or removal has been confirmed as necessary at this stage.

No additional crown pruning is currently identified as necessary to facilitate the proposed driveway construction.

ROAVR | Group all rights reserved.

5.5 Long-term Implications for Tree Canopies

The proposed driveway is not expected to result in significant long-term conflicts with the retained tree canopies, provided that adequate clearance is maintained and the proposed access can operate safely.

As the driveway will be located close to several retained trees, occasional minor tree management may be required in the future to maintain appropriate vehicle clearance.

Any future pruning should be based on the condition and management requirements of the individual trees and carried out in accordance with BS3998:2010 where applicable.

The potential conflict between T2 and the highway visibility splay remains unresolved and should be confirmed before the development proposals are finalised.

5.6 New Surfaces

The proposed development involves the construction of a new driveway approximately 4.1 m wide, extending from the existing turning area towards Woodlands Road.

A no-dig cellular confinement system is proposed within the designated critical construction area, where the new driveway extends into the RPAs of T1, T2, T5, T6, T7, T8 and T11.

The proposed system is intended to distribute vehicle loading while avoiding excavation and minimising disturbance to existing roots.

The architect's drawing specifies a 150 mm Cellweb system with a permeable block paving or porous resin-bound surface. The final construction build-up, finished levels, edge restraints and drainage arrangements should be confirmed before construction.

The detailed installation methodology is provided separately within the Arboricultural Method Statement (AMS).

5.7 Underground Services

Details of any new underground services associated with the proposed driveway have not been provided.

ROAVR | Group all rights reserved.

No excavation for underground services should take place within the RPAs of retained trees without prior arboricultural assessment.

Should new services be required within an RPA, their routes and installation methods must be reviewed and appropriate measures incorporated into the AMS before works commence.

5.8 Changes in Ground Level

The client has confirmed that no excavation or reduction in existing ground levels is proposed.

The proposed driveway may be raised approximately 150–200 mm above the existing ground level to accommodate the no-dig construction system.

Any increase in ground levels within RPAs must be carefully considered to avoid adversely affecting soil conditions, root function or tree stem bases.

The final finished levels and construction build-up should be confirmed through appropriate design details or cross-sections, particularly where the proposed driveway connects to Woodlands Road.

5.9 Soil Compaction

Construction activities have the potential to cause soil compaction within the RPAs of retained trees, particularly around the proposed driveway and access.

Tree protective fencing and Construction Exclusion Zones (CEZs) are proposed for T1, T3, T4, T7, T8, T11, T12, H9 and H10.

Tree protection boxes are proposed for T2, T5 and T6, while temporary ground protection is proposed within the affected RPAs of T1, T2, T5, T6, T7, T8 and T11.

These measures will restrict unauthorised construction activities and minimise soil compaction and accidental damage to retained trees.

The detailed protection specifications and construction controls are provided separately within the AMS.

5.10 Demolition Works

No demolition works have been identified as part of the current proposals.

Should the removal of any existing hardstanding, boundary structures or other features become necessary within the RPAs of retained trees, the proposed methodology must be reviewed before works commence.

ROAVR | Group all rights reserved.

5.11 Hazardous Materials

No specific hazardous materials or associated storage requirements have been identified within the proposed development information.

All fuels, chemicals, cement and other potentially harmful materials must be stored and handled outside designated RPAs and CEZs to prevent contamination of the rooting environment.

5.12 Site Set-Up

The site compound, construction access and material storage arrangements have not yet been confirmed.

The accompanying Tree Protection Plan (TPP) identifies tree protective fencing and CEZs for T1, T3, T4, T7, T8, T11, T12, H9 and H10, together with tree protection boxes around T2, T5 and T6.

Temporary ground protection will be required within designated areas where restricted construction access or activities are necessary.

All protective measures must be installed before the relevant construction activities commence and maintained throughout the works.

Site establishment, material storage and construction operations must be undertaken in accordance with the accompanying AMS and TPP.

5.13 Boundary Treatments

The proposed development includes the adjustment of the existing front boundary hedge to accommodate the required highway visibility splay.

The client has confirmed that the affected section of hedge between T1 and T2 is intended to be relocated behind the visibility splay to maintain privacy along the driveway boundary.

H9 and H10 are identified on the accompanying TPP for retention and protection. Any proposed removal, transplantation or replacement of hedge sections must be confirmed and coordinated with the protection measures shown on the TPP.

All boundary works within the RPAs of retained trees must be undertaken using methods that minimise root disturbance.

ROAVR | Group all rights reserved.

5.14 Arboricultural Method Statement Requirement

A separate Arboricultural Method Statement (AMS) has been prepared to accompany this Arboricultural Impact Assessment. The AMS provides detailed specifications and procedures for tree protective fencing, Construction Exclusion Zones, tree protection boxes, temporary ground protection and the proposed no-dig cellular confinement system. The AMS shall be read in conjunction with the accompanying Tree Protection Plan (TPP).

ROAVR | Group all rights reserved.

6. Limitations

6.1 ROAVR has prepared this Report for the sole use of the above named Client/Agent in accordance with our terms of business, under which our services were performed. No other warranty, expressed or implied, is made as to the professional advice included in this Report or any other services provided by us.

6.2 This Report may not be relied upon by any other party without the prior and express written agreement of ROAVR. The assessments made assume that the land use will continue for their current purpose without significant change. ROAVR has not independently verified information obtained from third parties.

6.3 This report, video walkthrough, data tables and raw data remain the copyright of ROAVR until such time as any monies owed are settled in full and the report may be withdrawn at any time.

6.4 This report, site visit, plans and conclusions are proportional to the proposals and in some cases a simple plan based impact assessment may be all that is required.

6.5 Important - to ensure fair allocation of resources, we allow you ten working days to review the report and issue any feedback, beyond that changes are chargeable.

6.6 For references and further information regarding tree survey process visit: https://www.roavr-group.co.uk/roavr-group/survey/sp-3-arboriculture/

Should you require any further information, please do not hesitate to contact us at any time.

Forest Shum
Arboricultural Consultant

Forest Shum

Prepared by: Forest Shum
Checked by: Connor Harmsworth

ROAVR | Group all rights reserved.

Appendix 1 – Site Location



Google Earth, 2026

ROAVR | Group all rights reserved.

Appendix 2 – Arboricultural Data Tables

ROAVR | Group all rights reserved.

Tree Number	Species	Age Class	DBH	Height (crown height)	N	E	S	W	Condition	Life Expectancy	Physical Description	Comments	Management Recommendations	RPA offset from stem.	Category Rating
T1	Chamaecyparis lawsoniana (Lawson Cypress)	EM	320,190	10(2)	2	2	3	1	Fair	10+	Cavity on stem. Stem divides above 1.5 m. Included bark present at the fork.	Major bark wounding on the larger of the two remaining stems, associated with a historical co-dominant stem failure at approximately 2.5 m on the eastern side. Good reaction wood growth is evident around the wound, and the remaining wood did not sound hollow when assessed using a sounding hammer.	None.	4.46	C1
T2	Taxus baccata (Yew)	EM	230,190	8(3)	3	3	2	1	Fair	20+	Leaning towards the east. Stem divides below 1.5 m.	Yew located adjacent to the proposed driveway entrance.	None.	3.58	B2
T3	Quercus robur (Common Oak)	M	1160	15(3)	6	8	11	8	Good	40+	Major deadwood present within the crown. Low branches extending over the road and footpath.	Historical large pruning wounds (greater than 400 mm in diameter) are present within the crown. The tree exhibits excellent vitality, with substantial regrowth and a full crown. High habitat value. No defects or cavities identified on the lower stem.	None.	13.92	A1
T4	Cedrus libani atlantica 'Glauca' (Atlantic Cedar)	SM	310	10(1.5)	4	2	5	5	Good	20+	Crown distorted due to group pressure.	Tree on edge of lawn area.	None.	3.72	B1
T6	Acer pseudoplatanus (Sycamore)	EM	340,250,240	14(5)	3	4	4	3	Poor	10+	Multiple stems arising at ground level. Decay present on the stem.	Tree situated along the boundary with the neighbouring property, immediately adjacent to the proposed driveway. An area of decay is present at the base of the central stem, which sounded hollow when assessed using a sounding hammer.	None.	5.82	C1
T5	Acer pseudoplatanus (Sycamore)	EM	310	13(6)	2	3	3	1	Fair	10+	Poor shape & form. Leaning East. Crown distorted due to group pressure.	Tree beside boundary with neighbouring property directly adjacent to proposed driveway.	None.	3.72	C1
T7	Acer pseudoplatanus (Sycamore)	EM	270,390	14(3)	3	4	5	5	Fair	10+	Stem divides at ground level.	Tree situated within the neighbouring property, adjacent to the boundary fence and the proposed driveway.	None.	5.69	C1

T8	*Laburnum anagyroides (Laburnum)*	*EM*	*130*	*7(4)*	*1*	*1*	*2*	*2*	*Fair*	*10+*	*Poor shape & form. Crown distorted due to group pressure.*	*Small tree situated within the neighbouring property.*	*None.*	*1.56*	*C1*
H9	*Prunus laurocerasus (Cherry Laurel)*	*SM*	*80*	*3(0)*	*1*	*1*	*1*	*1*	*Fair*	*10+*	*Part of linear group.*	*Hedge on neighbouring property.*	*None.*	*0.96*	*C2*
H10	*Fagus sylvatica (Beech)*	*SM*	*80*	*3(0)*	*1*	*1*	*1*	*1*	*Fair*	*10+*	*Part of linear group.*	*Hedge on neighbouring property.*	*None.*	*0.96*	*C2*
T11	*Abies procera (Noble Fir)*	*SM*	*90*	*4(1)*	*2*	*1*	*1*	*2*	*Fair*	*10+*	*Poor shape & form.*	*Small tree situated at the edge of the lawn area.*	*None.*	*1.08*	*C2*
T12	*Magnolia (Magnolia)*	*EM*	*90,100,90,80 ,80*	*3(1)*	*3*	*4*	*3*	*4*	*Fair*	*20+*	*Multiple stems at ground level.*	*Multi-stemmed tree situated within a planted flowerbed.*	*None.*	*2.36*	*B2*

Key to Arboricultural Data Tables

Tree Number	Reference no. T1, T2 etc. for trees; H for hedgerows; G for Groups and W for woodlands.
Species	Tree species Fagus sylvatica; Quercus robur - Latin names.
Age Class	The estimated age class of the tree (relative to species) Y - Young SM - Semi-mature EM - Early-mature M - Mature OM - Over-mature or V - Veteran
Height (Crown Height)	Height of the tree in metres. (Height of the crown above ground level in metres)
Number of Stems	Number of clear stems above 1.5 metres
Diameter at Breast Height	Diameter of stem (mm) at breast height (1.5 metres above ground).
Crown Spread (N, S, E, W)	The maximum spread of the tree's canopy measured from the stem in four directions (North, East, South, West).
Life Expectancy	Estimated safe, usable life expectancy.
Physical Description	Details of tree type, quality, location etc
Comments	Any comments or remarks recorded by the surveyor
Management Recommendations	Recommendations (regardless of the development proposals if available) for removal, retention and/or remedial arboricultural works.
RPA offset from stem	Radius of the root protection area measured in metres
Category Rating	Tree categorisation based on section 4.5 of BS 5837 (2012) Trees in relation to design, demolition and construction – Recommendations: A – Trees of high quality with an estimated remaining life expectancy of at least 40 years. B – Trees of moderate quality with an estimated remaining life expectancy of at least 20 years. C – Trees of low quality with an estimated remaining life expectancy of at least 10 years, or young trees with a stem diameter below 150mm U – Trees in such a condition that they cannot realistically be retained as living trees in the context of the current land use for longer than 10 years Subcategories: 1: Mainly arboricultural & aesthetic qualities 2: Mainly landscape qualities 3: Mainly cultural values, including conservation

Appendix 3 – Arboricultural Plans

ROAVR | Group all rights reserved.

General Notes
Do not scale off drawing - refer to the tree data schedule for accurate crown spread measurements.
Depictions of tree canopies are based on measurements taken to four cardinal compass points.
No liability of any kind Is accepted for any omissions or inaccuracies in respect of this plan.
The original of this drawing was produced in colour; a monochrome copy should not be relied upon.
All rights reserved.

44a

NE

ODLANDS ROAD

T3-A1

T12-B2

T4-B1

T1

T11-C2

T1-C1

T2

T2-B2

T6-C1

T5-C1

T8-C1

T7-C1

H9-C2

H10-C2

48

Parking

Turning area

Key

Trees
Showing Canopy extents, category colour and tag number (with category).
T1-B

Category A
Trees of high quality with an estimated remaining life expectancy of at least 40 years.

Category B
Trees of moderate quality with an estimated remaining life expectancy of at least 20 years.

Category C
Trees of low quality with an estimated remaining life expectancy of at least 10 years, or young trees with a stem diameter below 150 mm.

Category U
Trees in such a condition that they can not realistically be retained as living trees in the context of the current land use for longer than 10 years.

BS 5837:2012 Root Protection Area

N

1:200
0 8m

Drawing Title
Tree Constraints Plan

Client
Tony Tillett

Site/Project
48 Woodlands Lane, Quorndon, Derby, DE22 5JU

Scale/Sheet	Date		
1:200 @ A3	27/10/2026		
Drawing No	**Rev**	**Drawn By**	**Chked By**
26_5837_10_103	1	AC	MH

ROAVR

ROAVR Group, Marr House
Beechwood Business Park, Inverness, IV2 3BW
www.roavr-group.co.uk
support@roavr-group.co.uk
01463 667302

General Notes
Do not scale off drawing - refer to the tree data schedule for accurate crown spread measurements.
Depictions of tree canopies are based on measurements taken to four cardinal compass points.
No liability of any kind Is accepted for any omissions or inaccuracies in respect of this plan.
The original of this drawing was produced in colour; a monochrome copy should not be relied upon.
All rights reserved.

FRONT BOUNDARY HEDGE:
The front boundary hedge will be adjusted to follow a line behind the visibility splay.

WOODLANDS LANE
WOODLANDS ROAD
41m sight line
44
48
Parking
Turning area
Turning area
4.1m wide drive mauve
gate
yellow
133.4m
133.2m
30 mph sign
41m sight line
T3-A1
T12-B2
T4-B1
T1-C1
T11-C2
T2-B2
T5-C1
T6-C1
T7-C1
T8-C1
H9-C2
H10-C2

Key

Trees
Showing Canopy extents, category colour and tag number (with category).
T1-B

Category A
Trees of high quality with an estimated remaining life expectancy of at least 40 years.

Category B
Trees of moderate quality with an estimated remaining life expectancy of at least 20 years.

Category C
Trees of low quality with an estimated remaining life expectancy of at least 10 years, or young trees with a stem diameter below 150 mm.

Category U
Trees in such a condition that they can not realistically be retained as living trees in the context of the current land use for longer than 10 years.

BS 5837:2012 Root Protection Area

N
1:200
0
8m

Drawing Title	**Tree Assessment Plan**
Client	Tony Tillett
Site/Project	48 Woodlands Lane, Quorndon, Derby, DE22 5JU
Scale/Sheet	1:200 @ A3
Date	30/10/2026
Drawing No	26_5837_10_103
Rev	2
Drawn By	AC
Chked By	MH

ROAVR Group, Marr House
Beechwood Business Park, Inverness, IV2 3BW
www.roavr-group.co.uk
support@roavr-group.co.uk
01463 667302

Arboricultural Method Statement

1. Method Statement – Introduction and Overview

2. Site Inspection

3. Tree Works Schedule

4. Tree Protection Barriers – Detailed Specification

5. Ground Protection Measures – Detailed Specification

6. New Surfaces – Detailed Specification

7. Limitations

Appendix 1 – Tree Protection Specification

Appendix 2 – Tree Protection Plan

Validation Statement for the Local Planning Authority.

This report includes the following for LPA validation purposes:

- An **arboricultural method statement** which specifies tree protection measures and implementation strategy
- **Appendices** including the **tree protection plan**

1. Method Statement – Introduction and Overview

1.1 This Arboricultural Method Statement (AMS) has been prepared to establish the measures required to protect retained trees and hedges during the proposed construction of a new driveway and vehicular access at 48 Woodlands Lane, Quarndon, Derby, DE22 5JU.

1.2 The proposed development comprises a new driveway approximately 4.1 m wide, extending from the existing turning area towards Woodlands Road. The revised driveway alignment has been designed to accommodate the retention of existing trees, including T1, T2 and T11.

1.3 The proposed driveway will incorporate a no-dig cellular confinement system within the designated critical construction area, as shown on the accompanying Tree Protection Plan (TPP). The client has confirmed that no excavation or ground reduction is proposed and that the driveway may be raised approximately 150–200 mm above the existing ground level.

1.4 The protection measures specified in this AMS include:

- Tree protective fencing and Construction Exclusion Zones (CEZs).
- Tree protection boxes.
- Temporary ground protection within Root Protection Areas (RPAs).
- No-dig cellular confinement driveway construction.
- Appropriate arboricultural supervision.

1.5 All works shall be undertaken in accordance with BS5837:2012, the accompanying TPP and the requirements of this AMS.

1.6 No excavation, ground level changes or unauthorised construction activities shall be permitted within designated Construction Exclusion Zones (CEZs). Within the approved no-dig driveway construction area, works shall be undertaken strictly in accordance with the specified construction methodology and accompanying Tree Protection Plan.

1.7 Any proposed changes to the driveway alignment, construction methodology or tree protection arrangements shall be reviewed by the project arboriculturist before implementation.

2. Site Inspection

2.1 A pre-commencement site meeting shall be undertaken between the site manager and project arboriculturist before construction activities commence.

2.2 The meeting shall confirm the locations of retained trees, the proposed driveway footprint, tree protective fencing, CEZs, tree protection boxes, temporary ground protection and the no-dig construction area.

2.3 All tree protection measures shall be installed in accordance with the accompanying TPP before the relevant construction activities commence.

2.4 The project arboriculturist shall inspect the installed protective measures and confirm that they are appropriately positioned and suitable for the proposed works.

2.5 Arboricultural supervision shall be provided during sensitive construction operations within RPAs, particularly the initial installation of the cellular confinement system and any works close to retained tree stems.

2.6 The protective measures shall be maintained throughout the construction period. Any damage, displacement or proposed alteration shall be reported to the project arboriculturist and rectified before affected works continue.

2.7 Following completion of the relevant construction activities, a final inspection shall be undertaken before the removal of tree protection measures.

Arboricultural Supervision Schedule

Phase	Activity	Arboricultural responsibility
Pre-commencement	Site meeting and protection inspection	Confirm fencing, CEZs, tree protection boxes and ground protection
Construction	Initial no-dig installation	Supervise sensitive works within RPAs
Construction	Restricted activities within RPAs	Inspect protection measures and advise where required
Completion	Final inspection	Confirm completion of works and authorise removal of protection measures

3. Tree Works Schedule

3.1 No tree removals are currently proposed to facilitate the driveway construction.

3.2 All surveyed trees are proposed for retention, including T1, T2 and T11, following amendments to the driveway alignment.

3.3 T2 is located close to the proposed access onto Woodlands Road and may conflict with the highway visibility splay. Its retention remains subject to confirmation by the relevant authorities. No removal or significant pruning shall be undertaken without further arboricultural assessment and any necessary statutory consent.

3.4 No crown pruning has currently been identified as necessary to facilitate the proposed driveway construction.

3.5 Sections of the existing front boundary hedge between T1 and T2 are proposed to be relocated behind the visibility splay. The extent and methodology of these works shall be confirmed prior to commencement, with particular care taken to avoid damage to retained tree roots.

4. Tree Protection Barriers – Detailed Specification

4.1 Tree Protective Fencing and Construction Exclusion Zones

4.1.1 Tree protective fencing and Construction Exclusion Zones (CEZs) shall be established for T1, T3, T4, T7, T8, T11, T12, H9 and H10, as indicated on the accompanying TPP.

4.1.2 Protective fencing shall comprise suitable rigid barriers, such as securely joined welded mesh panels, supported and stabilised in accordance with BS5837:2012.

4.1.3 Where appropriate, fencing shall be installed in accordance with the barrier specifications illustrated in BS5837:2012 Figure 2 or Figure 3, depending on site conditions and the level of protection required.

4.1.4 Protective fencing shall be installed before construction activities commence and shall remain in place throughout the relevant construction period.

4.1.5 Clear warning signage identifying the protected areas shall be displayed on the fencing.

4.1.6 Within designated CEZs, the following activities shall be prohibited:

- Excavation or ground reduction.
- Storage of construction materials or equipment.
- Movement or parking of vehicles and machinery.
- Mixing or storage of cement, fuels or chemicals.
- Changes to existing ground levels.
- Unauthorised access by construction personnel.

4.1.7 Protective fencing shall not be relocated or removed without prior agreement from the project arboriculturist.

4.2 Tree Protection Boxes

4.2.1 Tree protection boxes shall be installed around T2, T5 and T6, as indicated on the accompanying TPP.

4.2.2 The protection boxes shall comprise suitable rigid structures designed to prevent accidental damage to retained tree stems during construction.

4.2.3 The structures shall be positioned to avoid direct contact with the tree bark and shall allow appropriate clearance around the stems and root flares.

4.2.4 Installation shall not involve excavation, damage to existing roots or the use of fixings attached directly to retained trees.

4.2.5 Tree protection boxes shall remain in position throughout the relevant construction activities and shall only be removed following agreement from the project arboriculturist.

5. Ground Protection Measures – Detailed Specification

5.1 Temporary ground protection shall be installed within the designated RPAs of T1, T2, T5, T6, T7, T8 and T11, as indicated on the accompanying TPP.

5.2 Temporary ground protection shall be installed before construction personnel, machinery or materials enter the designated protected areas.

5.3 The protection shall comprise suitable load-spreading boards, proprietary ground protection mats or an equivalent system appropriate for the anticipated construction loads.

5.4 The system shall be installed over the existing ground surface without excavation or unnecessary disturbance to the underlying soil and roots.

5.5 Where required, suitable cushioning or load-distribution layers shall be incorporated in accordance with BS5837:2012 and the manufacturer's specifications.

5.6 Temporary ground protection shall be maintained throughout the relevant construction activities to minimise soil compaction and prevent damage to existing roots.

5.7 Where temporary ground protection overlaps the permanent no-dig driveway construction area, removal or adjustment of the temporary protection shall be carefully coordinated with the installation of the cellular confinement system.

5.8 No unprotected trafficking shall be permitted within RPAs during the transition between temporary ground protection and permanent driveway construction.

5.9 Temporary ground protection shall only be removed when no longer required and following agreement from the project arboriculturist.

6. New Surfaces – Detailed Specification

6.1 Proposed No-Dig Driveway

6.1.1 The proposed driveway shall incorporate a no-dig cellular confinement system within the designated critical construction area, where the works encroach into the RPAs of T1, T2, T5, T6, T7, T8 and T11.

6.1.2 The architect's proposed layout specifies a 150 mm Cellweb Tree Root Protection System, incorporating a permeable block paving or porous resin-bound surface.

6.1.3 The client has confirmed that no excavation or reduction in existing ground levels is proposed. The driveway is intended to be constructed above the existing ground surface.

6.1.4 The final construction build-up, finished levels, edge restraints and drainage arrangements shall be confirmed before construction commences.

6.2 Site Preparation

6.2.1 The proposed driveway construction area shall be clearly identified before works commence.

6.2.2 Any existing surface vegetation requiring removal shall be carefully cut back or removed using methods that avoid disturbance to the underlying soil and roots.

6.2.3 No mechanical excavation, soil stripping, grading or ground reduction shall be undertaken within the affected RPAs.

6.2.4 Existing roots shall be retained undisturbed. Where roots or unexpected obstructions are encountered, works shall cease locally and advice shall be sought from the project arboriculturist.

6.3 Cellular Confinement System Installation

6.3.1 A suitable permeable separation geotextile shall be laid over the existing ground surface in accordance with the approved construction design and manufacturer's recommendations.

6.3.2 The cellular confinement system shall be installed above the existing ground level without excavation or disturbance to retained tree roots.

6.3.3 The cellular confinement system shall be filled with suitable clean, angular, free-draining aggregate in accordance with the approved specification.

6.3.4 Installation shall progress systematically to minimise repeated trafficking over unprotected ground.

6.3.5 The final permeable surface shall be installed in accordance with the approved driveway construction specification.

6.3.6 Edge restraints shall be designed and installed without unacceptable root damage. Any proposed fixings within RPAs shall be reviewed by the project arboriculturist before installation.

6.3.7 Particular care shall be taken around T1, T2 and T11 to prevent materials being placed directly against the tree stems or root flares.

6.3.8 The interface between the proposed raised driveway and Woodlands Road shall be carefully designed to avoid excavation within the RPAs of retained trees.

6.4 Construction Supervision

6.4.1 The project arboriculturist shall supervise the initial installation of the cellular confinement system within the affected RPAs.

6.4.2 Any unexpected roots, unsuitable ground conditions or proposed changes to the construction methodology shall be referred to the project arboriculturist before the affected works proceed.

6.4.3 The completed driveway shall maintain suitable drainage and permeability characteristics in accordance with the approved design.

Woodland Solutions (Northern) Ltd t/a ROAVR Group
The Green House
Beechwood Business Park North
Inverness
IV2 3BL
www.roavr-group.co.uk
T: 01463 667302

SITE SUPERVISION FORM - ARBORICULTURAL
CLERK OF WORKS

DATE	
CLIENT	
TELEPHONE NUMBER	
E-MAIL	

TERMS AND CONDITIONS FOR THE PROVISION OF ARBORICULTURAL CONSULTANCY

Site:	
Inspected by:	
Site Manager:	
Date of Inspection:	

Tree Protection Fencing.	
Comments/Actions:	
Ground Protection.	
Comments/Actions:	
Additional Comments.	
Remarks: I am aware of the tree protection requirements for this site and understand no retained trees must be damaged.	

Signed:		Dated:	
Name:		Company:	

Site supervision sheet

7. Limitations

7.1 ROAVR has prepared this Report for the sole use of the above named Client/Agent in accordance with our terms of business, under which our services were performed. No other warranty, expressed or implied, is made as to the professional advice included in this Report or any other services provided by us.

7.2 This Report may not be relied upon by any other party without the prior and express written agreement of ROAVR. The assessments made assume that the land use will continue for their current purpose without significant change. ROAVR has not independently verified information obtained from third parties.

7.3 This report, video walkthrough, data tables and raw data remain the copyright of ROAVR until such time as any monies owed are settled in full and the report may be withdrawn at any time.

7.4 This report, site visit, plans and conclusions are proportional to the proposals and in some cases a simple plan based impact assessment may be all that is required.

7.5 Important - to ensure fair allocation of resources, we allow you ten working days to review the report and issue any feedback, beyond that changes are chargeable.

7.6 For references and further information regarding tree survey process visit: https://www.roavr-group.co.uk/roavr-group/survey/sp-3-arboriculture/

Should you require any further information, please do not hesitate to contact us at any time.

Forest Shum
Arboricultural Consultant

Forest Shum

Prepared by: Forest Shum
Checked by: Tom Fellows

Appendix 1 – Tree Protection Specification

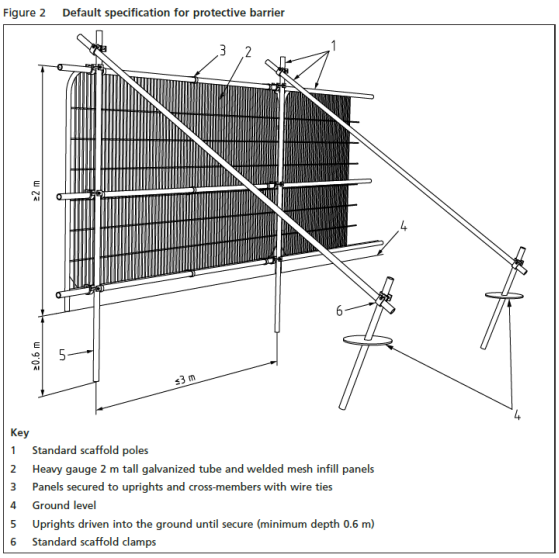

Tree protection fencing - fig 2 spec

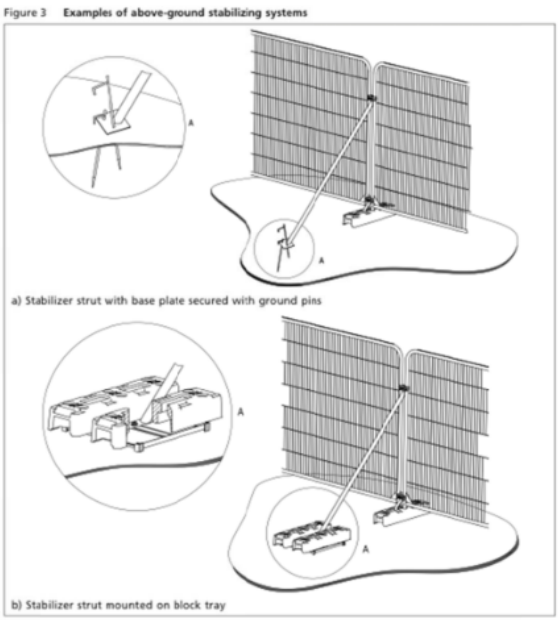

Tree protection fencing - fig 3 spec

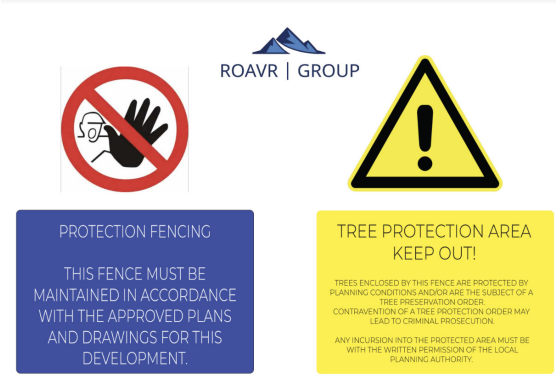

Fencing signage

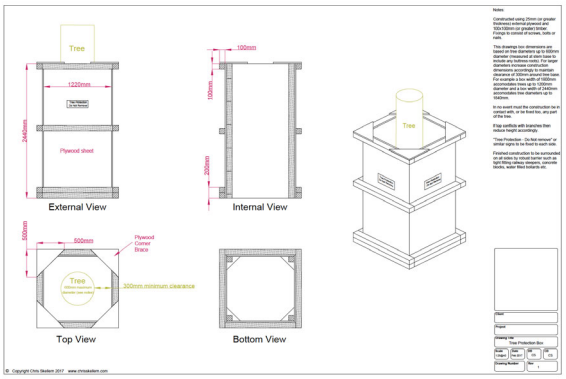

Stem protection



Ground protection boarding



Ground protection boarding

Appendix 2 – Tree Protection Plan

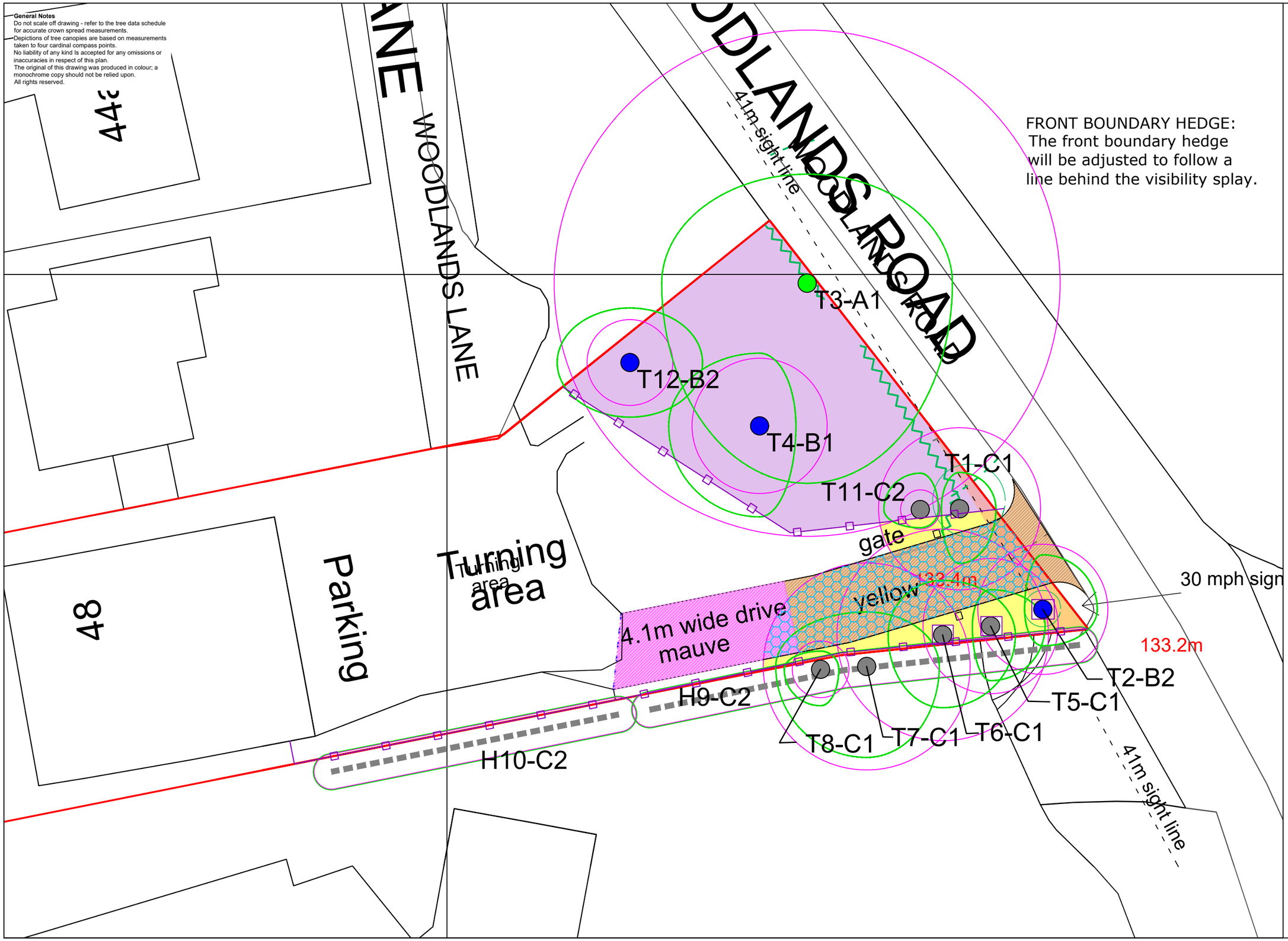

FRONT BOUNDARY HEDGE:
The front boundary hedge will be adjusted to follow a line behind the visibility splay.

General Notes
Do not scale off drawing - refer to the tree data schedule for accurate crown spread measurements.
Depictions of tree canopies are based on measurements taken to four cardinal compass points.
No liability of any kind Is accepted for any omissions or inaccuracies in respect of this plan.
The original of this drawing was produced in colour; a monochrome copy should not be relied upon.
All rights reserved.

Key

- T1-B — Trees: Showing Canopy extents, category colour and tag number (with category).
- Category A: Trees of high quality with an estimated remaining life expectancy of at least 40 years.
- Category B: Trees of moderate quality with an estimated remaining life expectancy of at least 20 years.
- Category C: Trees of low quality with an estimated remaining life expectancy of at least 10 years, or young trees with a stem diameter below 150 mm.
- Category U: Trees in such a condition that they can not realistically be retained as living trees in the context of the current land use for longer than 10 years.
- BS 5837:2012 Root Protection Area
- Ground Protection/Restricted Activity Zone
- No dig Cellular Confinement System.
- Construction Exclusion Zone
- Tree Protective Fencing
- Tree Protective Box

N

1:200
0 8m

Drawing Title	Tree Protection Plan
Client	Tony Tillett
Site/Project	48 Woodlands Lane, Quorndon, Derby, DE22 5JU
Scale/Sheet	1:200 @ A3
Date	03/11/2026
Drawing No	26_5837_10_103
Rev	1
Drawn By	AC
Chked By	MH

ROAVR Group, Marr House
Beechwood Business Park, Inverness, IV2 3BW
www.roavr-group.co.uk
support@roavr-group.co.uk
01463 667302