HIGH ATTENUATION UNIT

SPECIFICATION SHEET

A surface mounted Sustainable Drainage System (SuDS) with optional wildlife habitats.

10 year guarantee*

*T&C's apply

WITHOUT HABITATS

SuDS specific topsoil

Membrane

Water attenuation

Filtration media

Outflows can be placed left or right, to align with the downpipe on installation. Please confirm configuration required when ordering.

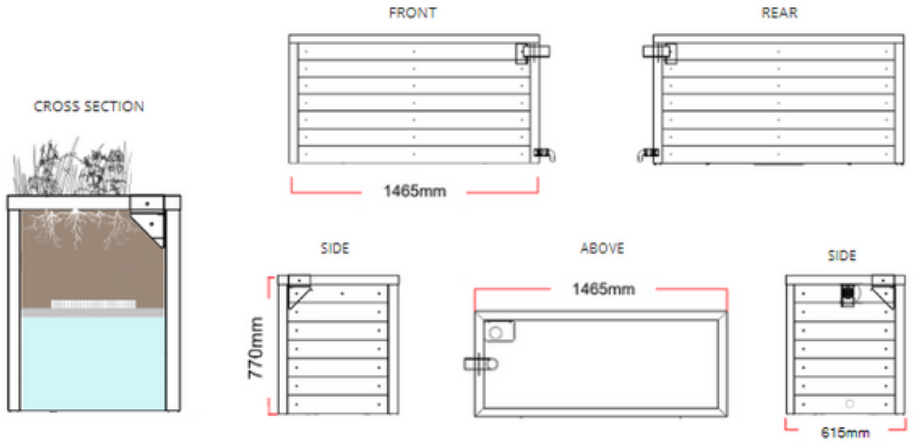

PRODUCT VARIATION	DIMENSIONS (L,W,H) (MM)	TOTAL VOLUME	WATER ATTENUATION	SOIL VOLUME	FILTRATION MEDIA	OUTFLOW PER SECOND
Without additional habitats	1465 x 615 x 770	478L	350L	270L	16L	<0.1 L

WITH HABITATS

SuDS specific topsoil

Membrane

Water attenuation

Filtration media

Outflows can be placed left or right, to align with the downpipe on installation. Please confirm configuration required when ordering.

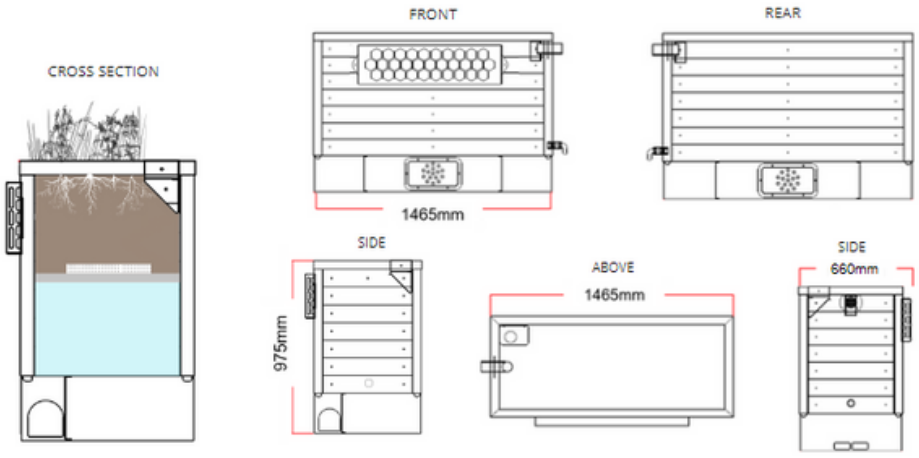

PRODUCT VARIATION	DIMENSIONS (L,W,H) (MM)	TOTAL VOLUME	WATER ATTENUATION	SOIL VOLUME	FILTRATION MEDIA	OUTFLOW PER SECOND
With additional habitats	1465 x 660 x 975	478L	350L	270L	16L	<0.1 L

BioScapes Limited, The Airfield, Seaton Ross, YO42 4NF

Tel: 01904 202 202 **Email:** info@bioscapes.co.uk **Website:** bioscapes.co.uk

© BioScapes® Limited. BioScapes is a registered trademark of BioScapes Limited. All rights reserved.
Patents Granted GB.2588793, GB.2577671 and Patent Application No. GB2314945.3. Version No.8.

BioScapes® Connecting Nature